Westinghouse

USER MANUAL

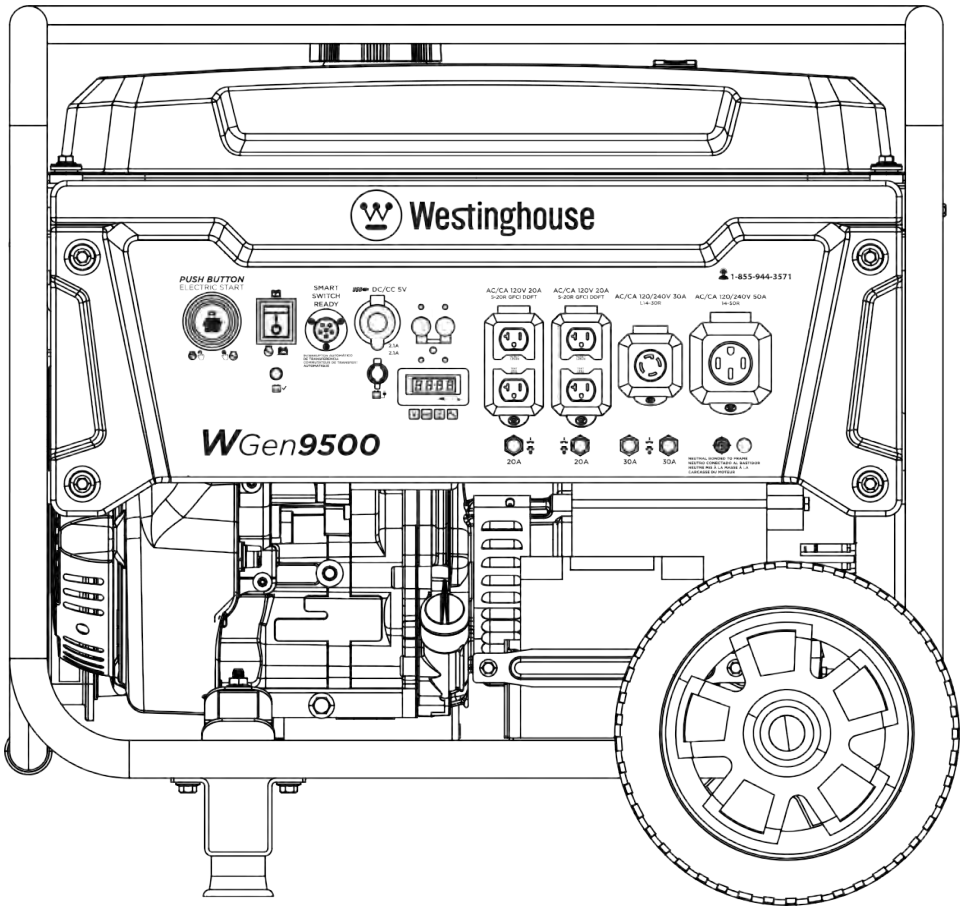

WGen9500

Portable Generator

Gasoline: 9500 Running Watts | 12500 Peak Watts

DO NOT RETURN THIS PRODUCT TO THE STORE

If you have questions or need assistance, please call customer service at 855-944-3571.

INTRODUCTION

TABLE OF CONTENTS

INTRODUCTION
DISCLAIMERS....2
ALL RIGHTS RESERVED....2
SPECIFICATIONS....3

SAFETY
SAFETY DEFINITIONS....4
SAFETY SYMBOLS....4
SAFETY INSTRUCTIONS....5
SAFETY LABELS AND DECALS....7

FEATURES
GENERATOR COMPONENTS....8
CONTROL PANEL COMPONENTS....9

ASSEMBLY
CARTON CONTENTS....10
INSTALL FEET AND WHEELS....10
INITIAL OIL FILL....11
FUEL....11
CONNECT THE BATTERY....12

OPERATION
GENERATOR LOCATION....13
GROUNDING....13
HIGH ALTITUDE OPERATION....14
REMOTE START....14
BREAK-IN PERIOD....15
BEFORE STARTING THE GENERATOR....15
STARTING THE ENGINE....15
FREQUENCY OF USE....15
AC CIRCUIT BREAKERS....16
POWER MANAGEMENT....17
EXTENSION CORDS....17
ST SWITCH....18
TRANSPORTING....18

MAINTENANCE
MAINTENANCE REMINDERS....18
MAINTENANCE SCHEDULE....19
MAINTENANCE REPLACEMENT PARTS....19
AIR FILTER MAINTENANCE....19
ENGINE OIL LEVEL CHECK....20
ENGINE OIL CHANGE....20
SPARK PLUG MAINTENANCE....21
SPARK ARRESTOR SERVICE....21
BATTERY MAINTENANCE....22
BATTERY REPLACEMENT....22
STORAGE....22
VALVE CLEARANCE....23

TROUBLESHOOTING
TROUBLESHOOTING....24

EXPLODED VIEW
EXPLODED VIEWS....26

SCHEMATICS
SCHEMATICS....29

⚠ **WARNING:** Operating, servicing, and maintaining this equipment can expose you to chemicals including engine exhaust, carbon monoxide, phthalates, and lead, which are known to the State of California to cause cancer and birth defects or other reproductive harm. To minimize exposure, avoid breathing exhaust, and wear gloves or wash your hands frequently when servicing this equipment. For more information go to www.P65warnings.ca.gov.

DISCLAIMERS

All information, illustrations, and specifications in this manual were in effect at the time of publishing. The illustrations used in this manual are intended as representative reference views only. We reserve the right to make any specification or design change without notice.

ALL RIGHTS RESERVED

All rights reserved. No reproduction allowed in any form without written permission from Westinghouse Outdoor Power Equipment, LLC.

⚠ DANGER

Read this manual before using or performing maintenance on this product. Failure to follow the instructions and safety precautions in this manual can result in serious injury or death.

SAVE THESE INSTRUCTIONS

SPECIFICATIONS

Specifications	
Running Watts:	9500
Peak Watts:	12500
Rated Voltage:	120/240V
Rated frequency:	60 Hz @ 3600 RPM
Phase:	Single phase
Total Harmonic Distortion:	≤ 23%
Engine Displacement:	457 cc
Starting Type:	Recoil, Electric Start, Remote
Fuel Capacity:	6.6 Gallons (25 Liters)
Fuel Type:	Unleaded gasoline 87–93 octane*
Oil Capacity:	1.16 Quart (1.1 Liter)
Oil Type:	SAE 10W-30
Spark Plug:	F7TC
Spark Plug Gap:	0.024 – 0.032 in. (0.60 – 0.80 mm)
Valve Intake Clearance:	0.0031 – 0.0047 in. (0.08 – 0.12 mm)
Valve Exhaust Clearance:	0.0051 – 0.0067 in. (0.13 – 0.17 mm)
AC Grounding System:	Neutral bonded to frame
Voltage Regulator:	AVR
Alternator Type:	Brushed
Maximum Ambient Temperature:	104°F (40°C)
Certifications:	• EPA • CARB

*Ethanol content of 10% or less. DO NOT use E15 or E85.

NOTICE

This product is designed and rated for continuous operation at ambient temperatures up to 104°F (40°C). If needed, this product can be operated at temperatures ranging from 5°F (15°C)–122°F (50°C) for short periods. If the product is exposed to temperatures outside of this range during storage, it should be brought back within this range before operation. This product must always be operated outdoors in a well-ventilated area and far away from doors, windows, and other vents.

Maximum wattage and current are subject to and limited by such factors as fuel BTU content, ambient temperature, altitude, engine conditions, etc. Maximum power decreases about 3.5% for each 1,000 feet above sea level, and will also decrease about 1% for each 10°F (6°C) above 60°F (16°C) ambient temperature.

PRODUCT REGISTRATION

For trouble-free warranty coverage, it is important to register your Westinghouse generator.

You can register by:

- Completing and mailing the product registration card included in the carton.
- Registering your product online at: **https://westinghouseoutdoorpower.com/pages/warranty-registration**
- Scan the following QR code with your smartphone camera to be directed to the mobile registration link.
- Sending the following product information to:

Westinghouse Outdoor Power
Warranty registration
777 Manor Park Drive
Columbus, OH 43228

For Your Records

Date of Purchase: _____

Model Number: _____

Serial Number: _____

Place of Purchase: _____

IMPORTANT: Keep your purchase receipt for trouble-free warranty coverage.

SAFETY

SAFETY DEFINITIONS

The words DANGER, WARNING, CAUTION, and NOTICE are used throughout this manual to highlight important information. Make sure that the meanings of this safety information is known to all who operate, perform maintenance on, or are near the generator.

This safety alert symbol appears with most safety statements. It means attention, become alert, your safety is involved! Please read and abide by the message that follows the safety alerts symbol.

⚠ DANGER

Indicates a hazardous situation which, if not avoided, will result in death or serious injury.

⚠ WARNING

Indicates a hazardous situation which, if not avoided, could result in death or serious injury.

⚠ CAUTION

Indicates a hazardous situation which, if not avoided, could result in minor or moderate injury.

NOTICE

Indicates a situation which can cause damage to the generator, personal property, and/or the environment, or cause the equipment to operate improperly.

Note: Indicates a procedure, practice or condition that should be followed for the generator to function in the manner intended.

SAFETY SYMBOLS

Follow all safety information contained in this manual and on the generator.

Symbol	Description
	Safety Alert Symbol
	Electrocution Hazard
	Asphyxiation Hazard
	Burn Hazard. Do not touch hot surfaces.
	Electrical Shock Hazard
	Fire Hazard
	Maintain Safe Distance
	Lifting Hazard
	Read Manufacturer's Instructions
	Do Not Operate in Wet Conditions

⚠ DANGER

Using a generator indoors CAN KILL YOU IN MINUTES. Generator exhaust contains carbon monoxide. This is a poison you cannot see or smell.

NEVER use inside a home or garage, EVEN IF doors and windows are open.

Only use OUTSIDE and far away from windows, doors, and vents.

SAFETY INSTRUCTIONS

CORRECT USAGE
Example location to reduce risk of carbon monoxide poisoning
ONLY use outside and downwind, far away from windows, doors and vents. Direct exhaust away from occupied spaces

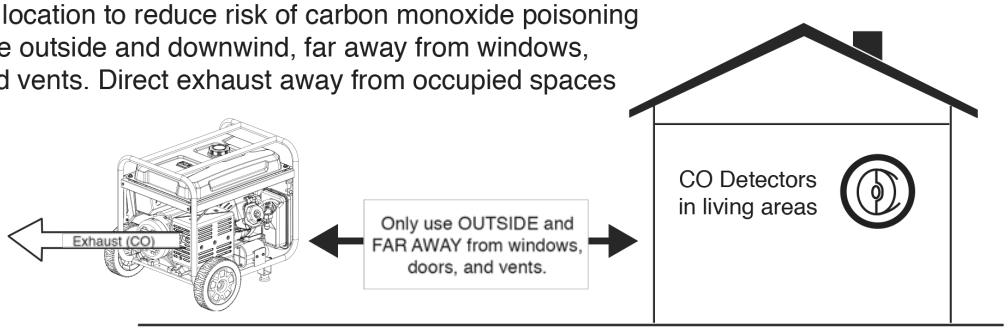

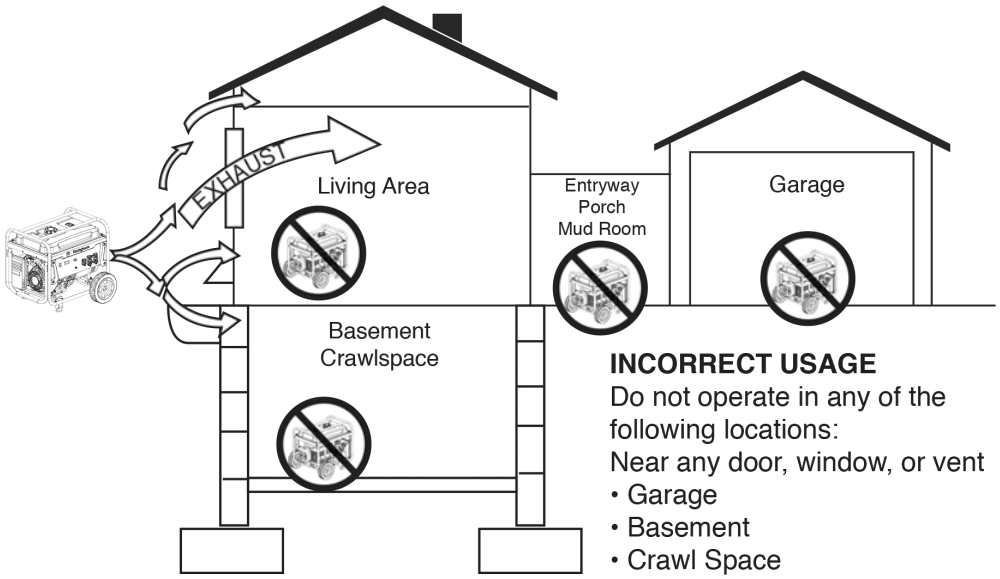

INCORRECT USAGE
Do not operate in any of the following locations:
Near any door, window, or vent
- Garage
- Basement
- Crawl Space
- Living Area
- Attic
- Entry Way
- Porch
- Mudroom

NOTICE

Install battery-powered carbon monoxide detectors or plug-in carbon monoxide detectors with battery back-up in living areas.

⚠ DANGER

Fire and electrocution hazard. Do not connect to a building's electrical system unless the generator and transfer switch have been properly installed and the electrical output has been verified by a qualified electrician. The connection must isolate the generator power from utility power and must comply with all applicable laws and electrical codes.

⚠ DANGER

Electrocution hazard. Never use the generator in a location that is wet or damp. Never expose the generator to rain, snow, water spray, or standing water while in use. Protect the generator from all hazardous weather conditions. Moisture or ice can cause a short circuit or other malfunction in the electrical circuit.

SAFETY

GENERAL SAFETY PRECAUTIONS

- Never use the generator to power medical support equipment.
- Do not operate the generator when you are tired or under the influence of drugs, alcohol, or medication.
- Do not use generator with electrical cords which are worn, frayed, bare, or otherwise damaged.
- All electrical tools and appliances operated from this generator must be properly grounded by use of a third wire or be double-insulated.
- When this generator is used to supply a building wiring system the generator must be installed by a qualified electrician and connected to a transfer switch as a separately derived system in accordance with NFPA 70, National Electrical Code.
- If you begin to feel sick, dizzy, or weak while using the generator, move to fresh air IMMEDIATELY. See a doctor, as you can have carbon monoxide poisoning.
- Only use OUTSIDE and far away from windows, doors, and vents as recommended by the US Department of Health and Human Services Centers for Disease Control and Prevention. Your specific home and/or wind conditions may require additional distance.
- While operating and storing, keep at least five feet of clearance on all sides of the generator, including overhead. Allow the generator to cool a minimum of 30 minutes before storage. Heat created by the muffler and exhaust gases could be hot enough to cause serious burns and/or ignite combustible objects.
- Do not touch the muffler or engine. They are very HOT and will cause severe burns. Do not put body parts or any flammable or combustible materials in the direct path of the exhaust.
- Always remove any tools or other service equipment used during maintenance away from the generator before operating.
- Avoid skin contact with engine oil or gasoline. Wear protective clothing and equipment. Wash all exposed skin with soap and water.

FUEL SAFETY

- Store fuel in a container approved for gasoline.
- Do not smoke when filling the generator with gasoline.
- Do not allow the generator's gas tank to overflow when filling.
- Shut down the engine and allow it to cool for two minutes before adding gasoline or oil to the generator.
- Never remove the fuel cap when the generator is running. Shut off the engine and allow the unit to cool at least two minutes. Remove the fuel cap slowly to release pressure, keep fuel from escaping around the cap, and to avoid the heat from the muffler igniting fuel vapors. Tighten the fuel cap securely after refueling.
- Wipe spilled fuel from the unit.
- Never attempt to burn off spilled fuel.
- Never overfill the fuel tank. Leave room for fuel to expand. Overfilling the fuel tank can result in a sudden overflow of gasoline and result in spilled gasoline coming in contact with HOT surfaces.
- Spilled fuel can ignite. If fuel is spilled on the generator, wipe up any spills immediately. Dispose of rag properly. Allow area of spilled fuel to dry before operating the generator.
- Wear eye protection while refueling.
- Never use gasoline as a cleaning agent.
- Store any containers containing gasoline in a well-ventilated area, away from any combustibles or source of ignition.

GASOLINE AND GASOLINE VAPOR (GAS)

⚠ DANGER

Fire and explosion hazard. Gasoline is highly explosive and flammable and can cause severe burns or death.

- In case of a gas fire, do not attempt to extinguish the flame if the fuel tank valve is in the ON position. Introducing an extinguisher to a generator with an open fuel valve could create an explosion hazard.
- Gas has a distinctive odor, this will help detect potential leaks quickly.
- Gas vapors can cause a fire if ignited.
- Gasoline is a skin irritant and needs to be cleaned up immediately if it comes in contact with the skin.

When starting the generator:

- Make sure that the fuel cap, air filter, spark plug, fuel lines, and exhaust system are properly in place.
- If you spill any gasoline on the tank, allow it to fully evaporate before operating.

When transporting or servicing the generator:

- Disconnect the spark boot to prevent accidental starting.

When storing the generator:

- Store away from sparks, open flames, pilot lights, heat, and other sources of ignition.
- Do not store gasoline near furnaces, water heaters, or any other appliances that produce heat or have automatic ignitions.

SAFETY LABELS AND DECALS

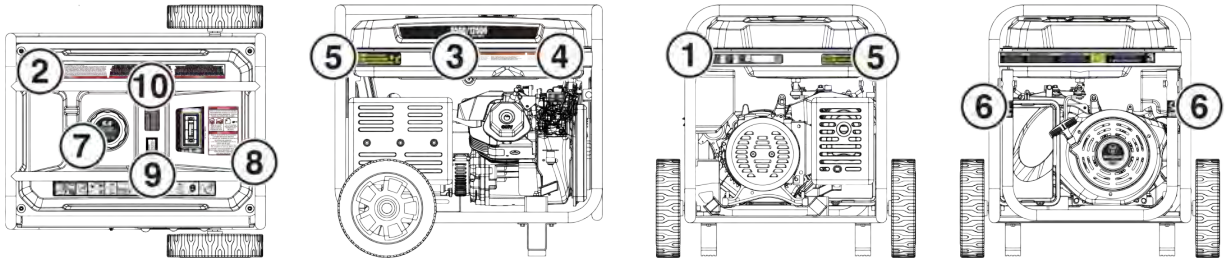

1

Westinghouse

Westinghouse Outdoor Power Equipment, LLC
Columbus Ohio 43228 USA

Westinghouse Outdoor Power Equipment, LLC
Columbus Ohio 43228 Etats-Unis

Model Modèle	WGen9500	Power (Rated) Puissance (Nom.)		Insul Class Classe D'isol	
Part No. Numero de pièce		Power (Peak) Puissance (Pointe)		Max Amb Temp Temp. Amb. Max	
AC Voltage Tension CA		Frequency Fréquence		Duty Service	
AC Current Intensité CA		RPM TR/MIN		Designed in Columbus, Ohio USA Con u à Columbus, Ohio, Etats-Unis	

Serial No./No. De Série

Serial Number
Número de serie
Numéro de série

Made in Vietnam/Fabriqué en Viêt Nam

Register your product:

2

⚠ DANGER

Read the owner's manual and follow all safety procedures prior to operating the generator. Failure to follow these instructions may lead to serious injury, property damage or death. Never add fuel to generator when the engine is hot or running. Never allow fuel to come in contact with running engine or hot generator parts. Always allow engine to cool down before adding fuel. Never touch hot surfaces. Generators pose risk of shock especially if operated in damp or wet conditions. Keep generator and stored fuel away from fire, sparks and cigarettes. Never connect to a building's electrical system unless a transfer switch has been installed by a certified electrician.

⚠ PELIGRO

Lea el manual del propietario y siga todos los procedimientos de seguridad antes de hacer funcionar el generador. El incumplimiento de estas instrucciones puede causar lesiones graves, daños a la propiedad o la muerte. Nunca agregue combustible al generador cuando el motor está caliente o en marcha. Nunca permitir que el combustible entre en contacto con el motor en marcha o partes calientes del generador. Siempre permita que el motor se enfríe antes de agregar combustible. Nunca toque las superficies calientes. Generadores presentan un riesgo de choque especialmente en caso de operar en condiciones húmedas o mojadas. Mantenga el generador y se almacena el combustible alejado del fuego, chispas o cigarrillos. Nunca conecte al sistema eléctrico de un edificio a menos que un interruptor de transferencia ha sido instalado por un electricista certificado.

⚠ DANGER

Lire le manuel de l'utilisateur et suivre toutes les procédures de sécurité avant de mettre le générateur en marche. Le fait de ne pas suivre ces instructions pourrait entraîner des blessures graves ou la mort, ou endommager les biens personnels. Ne jamais faire le plein d'essence pendant que le générateur est en marche ou si le moteur est chaud. Empêcher que l'essence n'entre en contact avec le moteur en marche ou avec des parties chaudes du générateur. Toujours laisser refroidir le moteur avant d'ajouter de l'essence. Ne jamais toucher aux surfaces chaudes. Le générateur présente un risque d'électrocution, particulièrement dans des conditions humides ou mouillées. Garder le générateur et les réservoirs d'essence éloignés des flammes nues, des étincelles et des cigarettes. Ne jamais brancher le générateur au circuit électrique principal d'un édifice, sauf si un commutateur de transfert a été mis en place par un électricien qualifié.

3

⚠ WARNING/ADVERTENCIA /AVERTISSEMENT

TOXIC FUMES HAZARD. Running engines gives off carbon monoxide, an odourless poisonous gas that can cause nausea, fainting, or death. Do not start engine indoors or in an enclosed area, even if the windows and doors are open.

PELIGRO DE HUMOS TÓXICOS. Los motores en funcionamiento emiten monóxido de carbono, un gas venenoso inodoro que puede causar náuseas, desmayos o la muerte. No arranque el motor en interiores o en un área cerrada, incluso si las ventanas y puertas están abiertas.

DANGER TOXIQUE. Faire fonctionner un moteur dégage de l'oxyde de carbone, un gaz inodore toxique qui peut provoquer la nausée, évanouissement ou la mort. Ne démarrer pas le moteur à l'intérieur ou dans une espace clos, même si les fenêtres et les portes sont ouvertes.

4

⚠ WARNING/ADVERTENCIA /AVERTISSEMENT

FOR ELECTRICAL EQUIPMENT ONLY
FOR USE IN A WEATHER PROTECTED WELL VENTILATED AREA
NEUTRAL BONDED TO FRAME

SOLO PARA EQUIPOS ELÉCTRICOS
PARA USO EN UN ÁREA BIEN VENTILADA PROTEGIDA POR EL CLIMA
NEUTRO VINCULADO AL MARCO

POUR MATÉRIEL ÉLECTRIQUE SEULEMENT
POUR UTILISATION DANS UN ENDROIT BIEN VENTILÉ ET PROTÉGÉE CONTRE LES INTEMPÉRIES NEUTRE RELIÉ AU CHÂSSIS

5

⚠ CAUTION HOT SURFACES
⚠ PRECAUCIÓN SUPERFICIES CALIENTES
⚠ ATTENTION AUX SURFACES CHAUDES

6

7

DO NOT OVERFILL

6.6 Gal 25L

USE FUEL STABILIZER FOR STORAGE

UTILISEZ UN STABILISATEUR DE CARBURANT POUR LE STOCKAGE

EL USO DEL ESTABILIZADOR DE COMBUSTIBLE PARA EL ALMANCENAMEIENTO

87 MINIMUM OCTANE
87 OCTANO MINIMUM
87 OCTANO MINIMO

8

⚠ DANGER

USING A GENERATOR INDOORS **CAN KILL YOU IN MINUTES**. GENERATOR EXHAUST CONTAINS CARBON MONOXIDE. THIS IS A POISON YOU CANNOT SEE OR SMELL.

NEVER USE INSIDE A HOME OR GARAGE, **EVEN IF** DOORS AND WINDOWS ARE OPEN.

ONLY USE **OUTSIDE** AND FAR AWAY FROM WINDOWS, DOORS, AND VENTS.

⚠ DANGER

Utiliser un générateur à l'intérieur PEUT VOUS TUER EN QUELQUES MINUTES.

Les gaz d'échappement du générateur contiennent du monoxyde de carbone. C'est un gaz toxique invisible et inodore

- NE JAMAIS utiliser à l'intérieur d'une maison ou d'un garage, MÊME SI les portes et les fenêtres sont ouvertes.
- Utiliser UNIQUEMENT à l'EXTÉRIEUR et loin des fenêtres, portes et ventilations.

⚠ PELIGRO

Si usa un generador en interiores MORIRÁ EN POCOS MINUTOS. El escape del generador contiene monóxido de carbono. Es un veneno que no tiene olor ni se puede ver.

- NUNCA lo use dentro de una casa o garaje, AUN si las puertas y ventanas están abiertas.
- Sólo úselo EN EXTERIORES y lejos de ventanas, puertas y ductos de ventilación.

9

WARNING: Cancer and reproductive harm - www.P65Warnings.ca.gov/product

AVERTISSEMENT: Cancer et problèmes de reproduction - www.P65Warnings.ca.gov/product

ADVERTENCIA: Cáncer y daños al sistema reproductor - www.P65Warnings.ca.gov/product

10

⚠ WARNING
⚠ ADVERTENCIA
⚠ AVERTISSEMENT

NEVER FUEL UNIT WITH ENGINE RUNNING.
ALWAYS FUEL UNIT IN WELL VENTILATED AREA.
ALWAYS CLEAN FUEL SPILLS.
ALWAYS ALLOW UNIT TO COOL BEFORE FUELING.

NUNCA COMBUSTE LA UNIDAD CON EL MOTOR EN MARCHA. SIEMPRE UNIDAD DE COMBUSTIBLE EN ZONA BIEN VENTILADA. SIEMPRE LIMPIE LOS DERRAMES DE COMBUSTIBLE. SIEMPRE PERMITA QUE LA UNIDAD ESTÉ EN FRÍO ANTES DE COMBUSTIBLE.

NE FAITES JAMAIS LE PLEIN LORSQUE LE MOTEUR EST EN MARCHE. FAITES TOUJOURS LE PLEIN DE L'UNITÉ DANS UN ENDROIT BIEN VENTILÉ, NETTOYEZ TOUJOURS LE CARBURANT RÉPANDU, LAISSEZ TOUJOURS REFROIDIR L'APPAREIL AVANT DE FAIRE LE PLEIN.

FEATURES

GENERATOR COMPONENTS

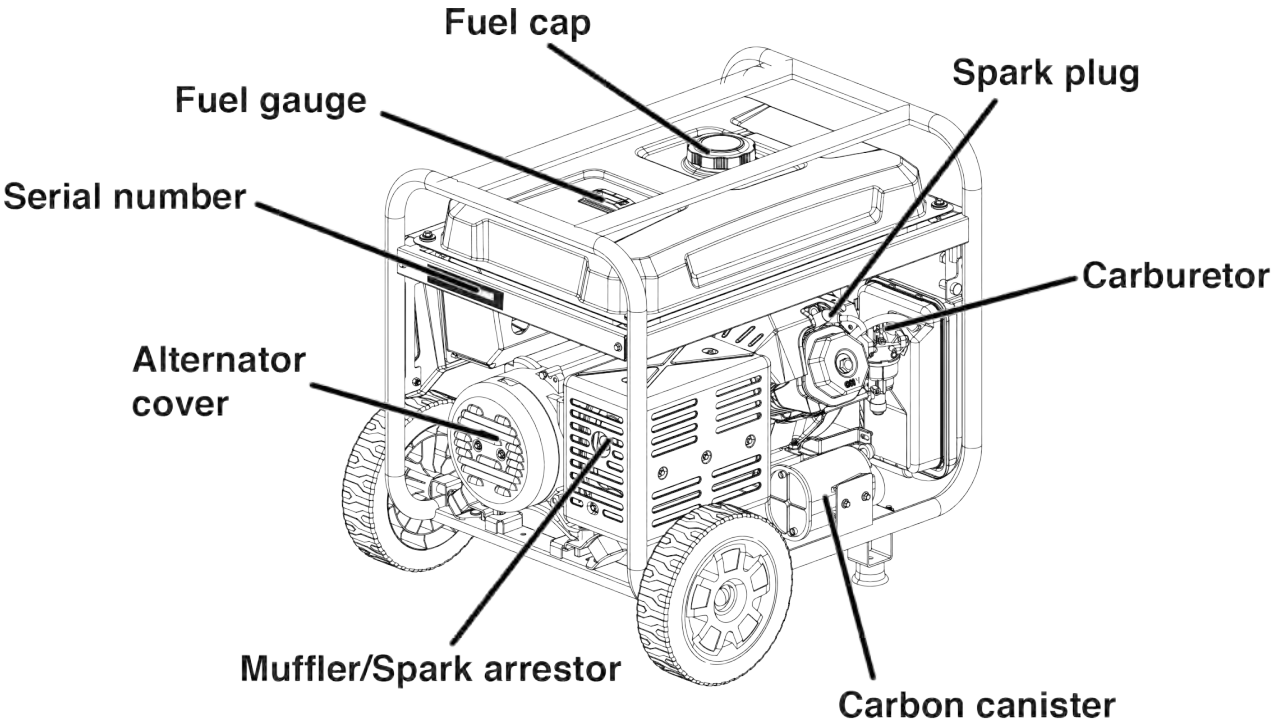

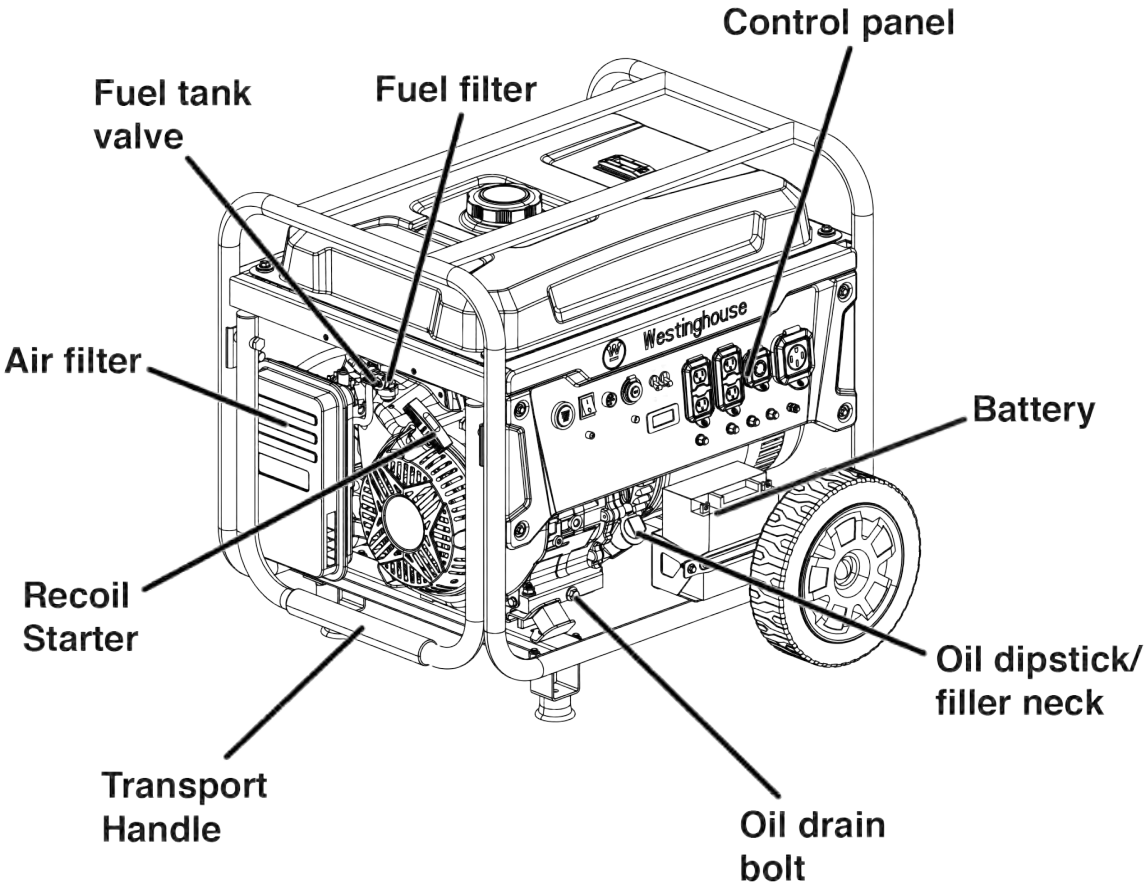

CONTROL PANEL COMPONENTS

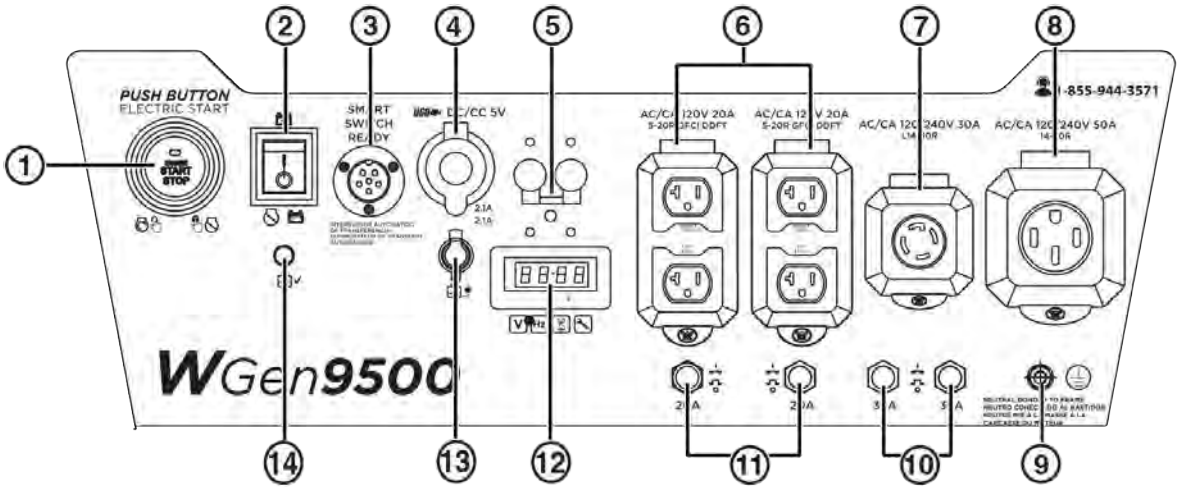

1. **Push-Button START/STOP:** Push once to automatically start the engine. Push again to stop the engine.
2. **Battery Switch:** Turns battery ON and OFF. Must be ON before electric or remote start.
3. **Smart Switch Outlet:** Connects the Westinghouse ST Switch (sold separately) to the control panel.
4. **USB Ports:** Two-port 5V/2.1A USB outlet. Accepts Type A USB plugs.
5. **Main Circuit Breaker**: The main circuit breaker controls total output of all outlets to protect the generator from overload or short circuit.
6. **120 Volt AC, 20 Amp Duplex GFCI NEMA 5-20R Receptacles:** Receptacles can supply a maximum of 20 Amps.
7. **120/240 Volt AC, 30 Amp NEMA 14-30R Twist-Lock Receptacle:** Receptacle can supply a maximum of 30 Amps.
8. **120/240 Volt AC, 50 Amp NEMA 14-50R Receptacle:** Receptacle can supply a maximum of 50 Amps.
9. **Ground Terminal:** The ground terminal is used to externally ground the generator.
10. **30 Amp AC Circuit Breakers:** Circuit breakers limits the current that can be delivered through each leg of the NEMA 14-30R receptacle to 30 Amps.
11. **20 Amp AC Circuit Breakers:** Circuit breakers limits the current that can be delivered through the NEMA 5-20R receptacles to 20 Amps.
12. **Data Center:** Toggle to show voltage, frequency, total hour meter, and run/maintenance timer.
13. **Battery Charging Port**: Used to charge the battery with the included battery charger.
14. **Battery Indicator:** Indicates that power is ON. Light will remain illuminated while the unit is ON.

DATA CENTER

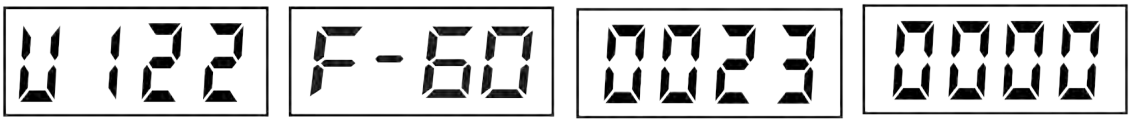

Voltage: Displays current voltage output.

Frequency (Hz): Displays power output frequency in Hertz.

Lifetime Hours: Displays the lifetime run hours.

Run Time/Maintenance: Displays current run time. Resets to zero when shut down. Maintenance reminder displayed when required.

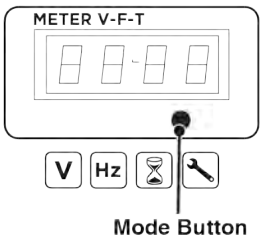

Push the Mode button to cycle through the data display modes.

Maintenance Codes:

P25: Change engine oil
P50: Clean air filter, Change engine oil
P100: Change engine oil, clean air filter, replace fuel filter

FEATURES

CARTON CONTENTS

⚠ CAUTION

Weight hazard. Always have assistance when lifting the generator.

1. Carefully open the carton.

2. Remove and save the carton contents.

3. Remove and discard the packing tray.

4. Unfold the top of the plastic bag enclosing the generator.

5. Carefully cut the vertical corners of the carton to access the generator.

6. Recycle or dispose of the packaging materials properly.

CARTON CONTENTS

- User manual
- Quick Start Guide/Maintenance Schedule
- Remote start key fob (attached to recoil starter)
- 1.16 Quart (1.1 Liter) bottle of SAE 10W-30 Oil
- Battery charger
- Spark plug socket wrench
- Oil Funnel
- Assembly wrench
- Wheel and mounting foot components
- Mounting foot (2)
- Flange bolt, M8 (4)
- Wheel (2)
- Shaft pin (2)
- Washer (2)
- Cotter pin (2)

If any parts are missing, contact our service team at service@wpowereq.com or call 1-855-944-3571.

INSTALL FEET AND WHEELS

NOTICE

Assembling the generator will require lifting the unit on one side. Install the mounting feet and wheel before adding fuel or oil.

1. Place generator on a flat surface.

2. Tip the generator on a piece of cardboard or other soft material to protect the frame paint and prevent the generator from sliding.

3. With the included wrench, install the mounting feet to the frame as shown.

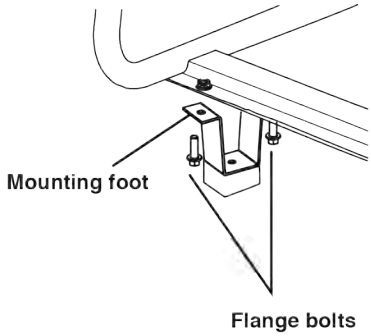

4. Install the wheels as shown.

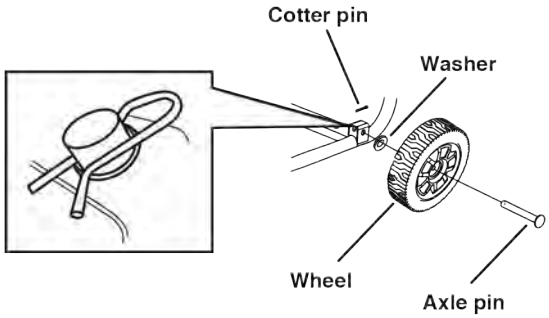

Note: The wheels are only intended for hand transport. The wheels are not suitable for towing the generator either on or off-road.

INITIAL OIL FILL

NOTICE

THIS GENERATOR HAS BEEN SHIPPED WITHOUT OIL. Do not attempt to crank or start engine before it has been properly serviced with recommended oil. Failure to add engine oil before starting will result in serious engine damage.

NOTICE

Use of 2-stroke/cycle oil or other unapproved oil types can cause severe engine damage that is not covered under warranty.

The included, recommended oil type for typical use is 10W-30 engine oil. If running the generator in extreme temperatures, refer to the following chart.

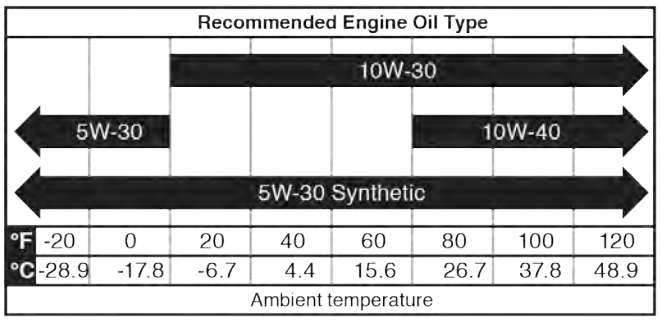

1. On a level surface, remove the oil dipstick.

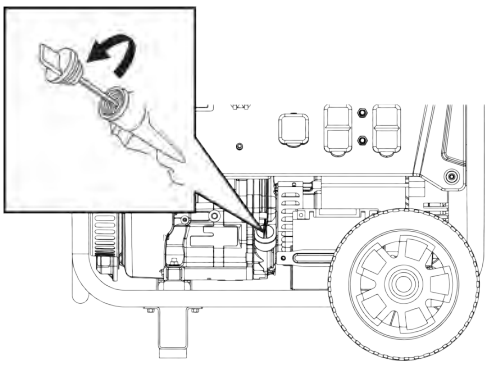

2. Using the supplied funnel and oil, add oil into oil filler neck.

Note: As residual oil from the factory may remain in the engine, add the oil incrementally near the end of the bottle to prevent overfilling the engine. See Engine Oil Level Check in the Maintenance section.

3. Replace the oil dipstick and hand-tighten.

FUEL

⚠ WARNING

Fire and explosion hazard. Never use a gasoline container, gasoline tank, or any other fuel item that is broken, cut, torn or damaged.

⚠ DANGER

Fire and explosion hazard. Do not overfill fuel tank. Fill only to the red fill ring located in the in-tank fuel screen filter. Overfilling may cause fuel to spill onto engine causing a fire or explosion hazard.

⚠ DANGER

Fire and explosion hazard. Never refuel the generator while the engine is running. Always turn the engine off and allow the generator to cool for two minutes before refueling.

NOTICE

Do not use E15 or E85 fuel in this product. Engine or equipment damage caused by stale fuel or the use of unapproved fuels (such as E15 or E85 ethanol blends) is not covered by warranty. Only use unleaded gasoline containing up to 10% ethanol.

FUEL REQUIREMENTS

- CLEAN, FRESH, unleaded gasoline, 87–93 octane.
- Up to 10% ethanol (gasohol) is acceptable (where available; non-ethanol fuel is recommended).
- DO NOT use E85 or E15.
- DO NOT use a gas oil mix.
- DO NOT modify the engine to run on alternate fuels.
- DO NOT fuel indoors.
- DO NOT create a spark or flame while fueling.

USING FUEL STABILIZER

Adding a fuel stabilizer (not included) extends the usable life of fuel and helps prevent deposits from forming that can clog the fuel system. Follow the manufacturer's instructions for use.

Always mix the correct amount of fuel stabilizer to gasoline in an approved gasoline container before fueling the generator. Run the generator for five minutes to allow the stabilizer to treat the entire fuel system.

ASSEMBLY

FILLING THE FUEL TANK

1. Turn the generator OFF and allow to cool for a minimum of two minutes before fueling.

2. Place the generator on level ground in a well ventilated area.

3. Clean area around fuel cap and remove the cap slowly.

NOTICE

Only fill the tank from an approved gasoline container. Make sure the gasoline container is internally clean and in good condition to prevent fuel system contamination.

4. Slowly add the recommended fuel. Do not overfill. Fill only to the red maximum fill ring on the fuel screen filter visible in the filler neck.

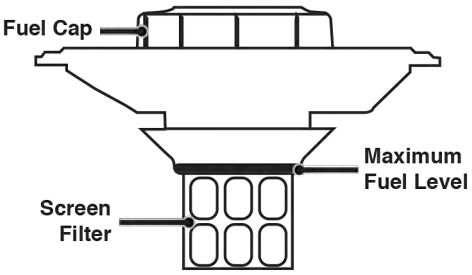

5. Install the fuel cap.

NOTICE

Fuel can damage paint and plastic. Use caution when filling the fuel tank. Damage caused by spilled fuel is not covered under warranty.

NOTICE

Clean the fuel screen filter of debris before and after each fueling. Remove the fuel screen filter by slightly compressing it while removing it from the fuel tank.

CONNECT THE BATTERY

A quick-connect battery plug is pre-installed on the battery. Remove the cable tie securing the plugs then push firmly to connect them.

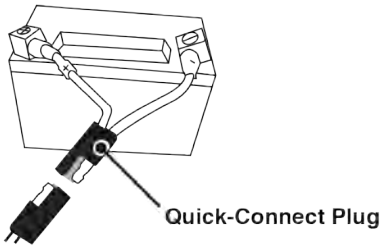

Note: The generator is equipped with a battery charging feature. Once the engine is running, a small charge will slowly recharge the battery.

GENERATOR LOCATION

Read and understand all safety information before starting the generator.

⚠ DANGER

Using a generator indoors CAN KILL YOU IN MINUTES. Generator exhaust contains carbon monoxide. This is a poison you cannot see or smell.

NEVER use inside a home or garage, EVEN IF doors and windows are open.

Only use OUTSIDE and far away from windows, doors, and vents.

NEVER operate the generator inside any building, including garages, basements, crawlspaces, sheds, enclosure, or compartment, including the generator compartment of a recreational vehicle.

⚠ DANGER

Electrocution hazard. Never use the generator in a location that is wet or damp. Never expose the generator to rain, snow, water spray, or standing water while in use. Protect the generator from all hazardous weather conditions. Moisture or ice can cause a short circuit or other malfunction in the electrical circuit. Using a generator or electrical appliance in wet conditions, such as rain or snow, or near a pool or sprinkler system, or when your hands are wet, could result in electrocution

⚠ WARNING

Fire hazard. Only operate the generator on a solid, level surface. Operating the generator on a surface with loose material such as sand or grass clippings can cause debris to be ingested by the generator that could block cooling vents or the air intake system. Allow the generator to cool for 30 minutes before transport or storage.

The generator should be on a flat, level surface at all times (Even while not in operation). The generator must have at least 5 ft. (1.5 m) of clearance from all combustible material.

Do not operate the generator in the back of a SUV, camper, trailer, truck bed (regular, flat, or otherwise), under stairs, next to walls or buildings, or in any other location that will not allow for adequate cooling of the generator and/or the muffler. DO NOT contain generators during operation.

⚠ DANGER

Asphyxiation hazard. Place the generator in a well-ventilated area. DO NOT place the generator near vents or intakes where exhaust fumes could be drawn into occupied or confined spaces. Carefully consider wind and air currents when positioning the generator.

GROUNDING

⚠ WARNING

Shock hazard. Failure to properly ground the generator can result in electric shock.

NOTICE

Only use grounded 3-prong extension cords, tools, and appliances, or double-insulated tools and appliances.

The generator neutral is bonded to the frame. There is a permanent conductor between the generator (stator wire) and the frame. If this generator will be used only with cord and plug equipment connected to the receptacles mounted on the generator, National Electric Code does not require that the unit be grounded. However, other methods of using the generator may require grounding to reduce the risk of shock or electrocution.

Before using the ground terminal, consult a qualified electrician, electrical inspector, or local agency having jurisdiction for local codes or ordinances that apply to the intended use of the generator.

DISCONNECTING THE BONDED NEUTRAL

Removing the bonded neutral disables the GFCI protection from the 5-20R receptacles. The bonded neutral should only be removed under specific circumstances. Consult a qualified electrician to determine if your situation requires disconnecting the bonded neutral.

1. Remove the alternator cover.

2. Remove the bonded jumper wire and reinstall the nut.

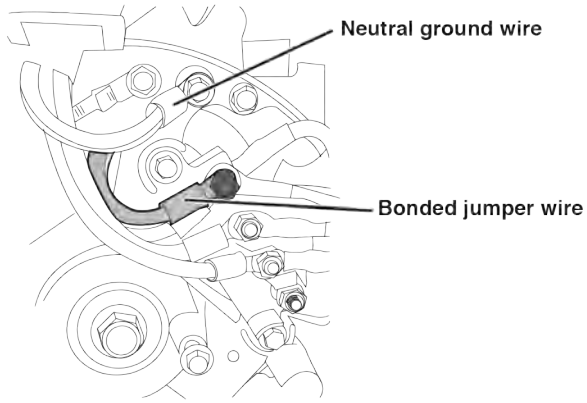

3. Remove the nut securing the neutral ground wire and attach the bonded jumper wire. Reinstall the nut.

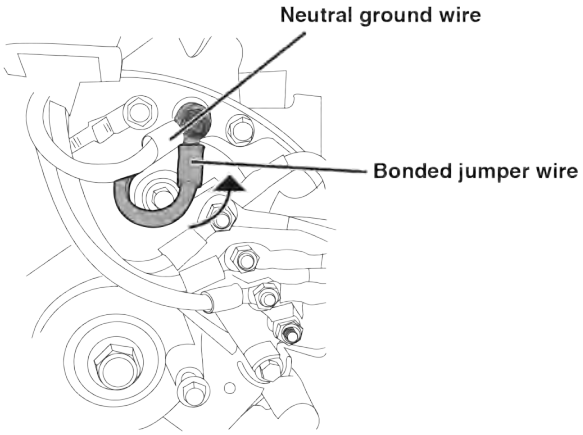

4. Reinstall the alternator cover.

IMPORTANT: Apply a new "NEUTRAL UNBONDED" Label over the "NEUTRAL BONDED TO FRAME" label on the front of the control panel.

HIGH ALTITUDE OPERATION

Engine power is reduced the higher you operate above sea level. Output will be reduced approximately 3.5% for every 1000 feet of increased altitude from sea level.

High altitude adjustment is required for operation at altitudes over 5,000 ft. (1524 m). Operation without this adjustment will cause decreased performance, increased fuel consumption, and increased emissions.

NOTICE

Do not operate the generator at altitudes below 2,000 ft. (762 m) with the high altitude kit installed. Engine damage may occur.

High Altitude Carburetor Kit	**Part#** 518076-1

REMOTE START

⚠ WARNING

Verify that the area around the generator is clear before remote starting the generator.

The remote start key fob included with the generator should be attached to the recoil handle or control panel. If your unit was shipped without a key fob, contact Westinghouse customer service.

The generator can be started remotely from up to 99 feet (30 meter) using the remote start key fob.

Note: As the batteries in the remote start key fob drain, operational distance will decrease.

PAIRING THE REMOTE START

Remote replacement batteries: (2) CR2016

If the remote start key fob is replaced or needs re-paired to the generator, follow this procedure.

1. Turn the generator battery switch to the ON position. The power indicator light will illuminate.

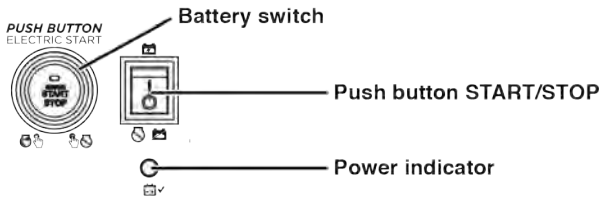

2. Push and hold the red Pairing button on the side of the control panel until the START/STOP button illuminates.

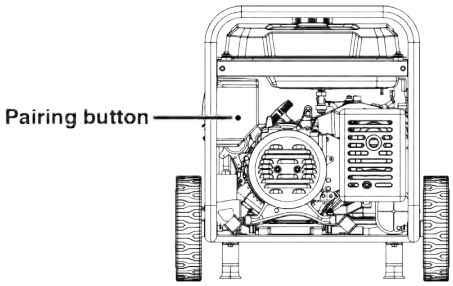

3. Push and hold the STOP button on the key fob until the START/STOP button illumination turns OFF. Release the button. The START/STOP button will illuminate after the button is released.

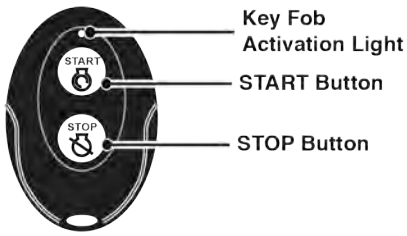

4. Push and hold the START button on the key fob until the START/STOP button illumination turns OFF. Release the button. The START/STOP button will illuminate after the button is released.

5. Push the Pairing button on the side of the control panel until the START/STOP button illumination turns OFF. Release the button.

6. Turn the generator battery switch to the OFF position. The remote is now paired.

BREAK-IN PERIOD

For proper break-in, do not exceed 50% of the rated running watts (4750 watts) during the first five hours of operation.

Vary the load occasionally to allow stator windings to heat and cool and help seat the piston rings.

BEFORE STARTING THE GENERATOR

Verify that:

- The generator is placed in an safe, appropriate location.
- The generator is on a dry, flat, and level surface.
- The engine is filled with oil.
- All loads are disconnected.

⚠ DANGER

Fire and explosion hazard. DO NOT move or tip the generator during operation.

STARTING THE ENGINE

1. Verify that fuel is in the gas tank.

2. Turn the fuel selector switch on the control panel to gasoline operation.

3. Turn the fuel tank valve to the ON position.

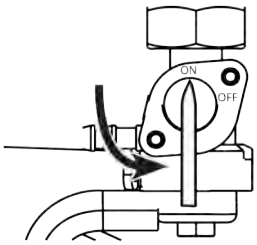

4. Push the battery switch to the ON position.

5. Choose the starting method:

a. Remote Start: Push and hold the START button on the remote start key fob for one second.

b. Push-Button Start: Push and hold the engine START/STOP button for two seconds.

c. Recoil Start: Manually close the choke if the engine is cold. Firmly grasp and pull the recoil handle slowly until you feel increased resistance, then pull rapidly.

Cold start: Close the choke by moving it right toward the front handle of the generator.

STOPPING THE ENGINE

1. Turn off and unplug all connected electrical loads.

IMPORTANT: Never start or stop the generator with electrical devices connected.

2. Let the generator run with no load for several minutes to stabilize internal temperatures of the engine.

3. Push and hold the START/STOP button for one second or push STOP on the remote start key fob for one second.

Note: Alternately, if the generator is used infrequently, turn the fuel tank valve to the OFF position to limit the residual fuel remaining in the carburetor float bowl. The engine will stop when fuel in the carburetor and fuel line is exhausted.

4. Push the battery switch to the OFF position.

FREQUENCY OF USE

If the generator will be used on an infrequent or intermittent basis (more than one month before next use), refer to the Battery Maintenance and Storage sections of this manual for information regarding battery charging and fuel deterioration.

OPERATION

AC CIRCUIT BREAKERS

The circuit breakers will automatically switch OFF if there is a short circuit or a significant overload of the generator at each receptacle. The main circuit breaker will automatically switch OFF if the combined load of the receptacles exceeds 40 Amps.

If an AC circuit breaker switches OFF automatically, check that the appliance is working correctly and it does not exceed the rated load capacity of the circuit before resetting the AC circuit breaker ON.

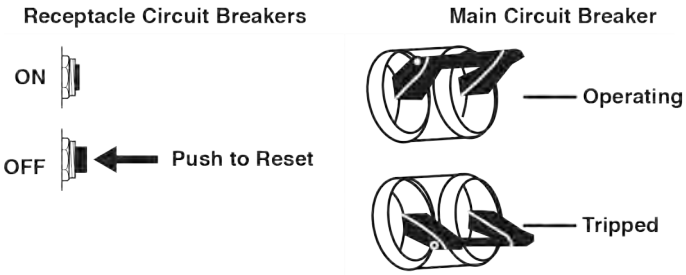

GENERATOR CAPACITY

NOTICE

Do not overload the generator's capacity. Exceeding the generator's wattage/amperage capacity can damage the generator and/or electrical devices connected to it.

Make sure the generator can supply enough continuous (running) and surge (starting) watts for the items you will power at the same time.

The total power requirements (Volts x Amps = Watts) of all appliances connected must be considered. Appliance and power tool manufacturers usually list rating information near the model or serial number.

To determine power requirements:

1. Select the items you will power at the same time.
2. Total the continuous (running) watts of these items. This is the amount of power the generator must produce to keep the items running. See the wattage reference chart on the next page.
3. Estimate how many surge (starting) watts you will need. Surge wattage is the short burst of power needed to start electric motor-driven tools or appliances such as a circular saw or refrigerator. Because not all motors start at the same time, total surge watts can be estimated by adding only the item(s) with the highest additional surge watts to the total rated watts from step 2.

Example:

Tool or Appliance	Running Watts*	Starting Watts*
RV Air Conditioner (11,000 BTU)	1010	1600
TV (Tube Type)	300	0
RV Refrigerator	180	600
Radio	200	0
Light (75 Watts)	300	0
Coffee Maker	600	0
	2590 Total Running Watts*	1600 Highest Starting Watts*

Total Running Watts	2590
Highest Starting Watts	+ 1600
Total Starting Watts Needed	4190

*Wattages listed are approximate. Verify actual wattage.

POWER MANAGEMENT

To prolong the life of the generator and attached devices, use care when adding electrical loads to the generator. There should be nothing connected to the generator outlets before starting the engine. The correct and safe way to manage generator power is to sequentially add loads as follows:

1. With nothing connected to the generator, start the engine as described in this manual.
2. Plug in and turn on the first load, preferably the largest load you have.
3. Permit the generator output to stabilize (engine runs smoothly and attached device operates properly).
4. Plug in and turn on the next load.
5. Again, permit the generator to stabilize.
6. Repeat steps 4 and 5 for each additional load.

Wattage Reference

Tool or Appliance	Estimated Running Watts*	Estimated Starting Watts*
Incandescent Lights (4 Quantity x 75 Watts)	300	0
TV (Tube Type)	300	0
Sump Pump (1/3 hp)	800	1300
Refrigerator or Freezer	700	2200
Well Pump (1/3 hp)	1000	2000
Furnace (1/2 hp)	800	2350
Radio	200	0
Drill (3/8”, 4 amps)	440	600
Circular Saw (Heavy Duty, 7-1/4”)	1400	2300
Miter Saw (10”)	1800	1800
Table Saw (10”)	2000	2000

*Wattages listed are approximate. Verify actual wattage.

EXTENSION CORDS

⚠ WARNING

Asphyxiation hazard. Extension cords running directly into the home increase the risk of carbon monoxide poisoning through any openings. If an extension cord running directly into your home is used to power indoor items, there is a risk of carbon monoxide poisoning to people inside the home. Always use battery-powered carbon monoxide detector (s) that meet current UL 2034 safety standards when running the generator. Regularly check the detector (s) battery.

⚠ WARNING

Asphyxiation hazard. When operating the generator with extension cords, make sure the generator is located in an open, outdoor area, far away from occupied spaces with exhaust pointed away.

⚠ WARNING

Fire and electrocution hazard. Never use worn or damaged extension cords. Damaged or overloaded extension cords could overheat, arc, and burn resulting in death or serious injury.

Before connecting an AC appliance or power cord to the generator:

- Use grounded 3-prong extension cords, tools, and appliances, or double-insulated tools and appliances.
- Make sure the tool or appliance is in good working order. Faulty appliances or power cords can create a potential for electric shock.
- Make sure the electrical rating of the tool or appliance does not exceed the rated power of the generator or the receptacle being used.

OPERATION

EXTENSION CORD SIZING

Only use grounded 3-prong extension cords marked for outdoor use that are rated for the electrical load.

Total Amperage	Minimum Gauge, Outdoor Rated	
	Up to 50 FT (15 M)	Up to 100 FT (30 M)
Up to 10A	12	8
Up to 15A	10	8
Up to 20A	10	6
Up to 30A	8	6
Up to 35A	6	6

ST SWITCH

The wGen9500DF is compatible with the ST Switch, purchased separately. When utility power is on it will provide power (up to 120V @ 20A) to the appliances plugged into the 5-20R receptacle on the ST Switch. When utility power is lost the ST Switch automatically transfers input power from utility to generator power. When utility power is restored, the ST Switch transfers input power back to utility. Visit www.westinghouseoutdoorpower.com for more information.

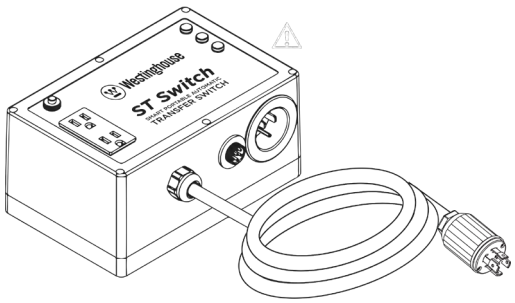

TRANSPORTING

⚠ CAUTION

Weight hazard. Always have assistance when lifting the generator.

- Allow the generator to cool a minimum of 30 minutes before transporting.
- Replace all protective covers on the generator control panel.
- Only use the generator's fixed frame to lift the unit or attach any load restraints such as ropes or tie-down straps. Do not attempt to lift or secure the generator by holding onto any of its other components.
- Keep the unit level during transport to minimize the possibility of fuel leakage or, if possible, drain the fuel or run the engine until the fuel tank is empty before transport.
- The generator wheels are only intended for hand transport. The wheels are not suitable for towing the generator either on or off-road.
- Use the extendable handle for one-person, hand transport. Only use the handle while the generator is OFF, stationary, and resting on a horizontal surface. Do not use the handle to lift the generator entirely off the ground, tow it, or up-end it.

⚠ CAUTION

Fire hazard. Do not up-end the generator or place it on its side. Fuel or oil can leak and damage to the generator may occur.

MAINTENANCE REMINDERS

Maintenance reminder codes will be shown on the Data Display based on unit Lifetime Hours. The maintenance codes will be displayed until the unit is turned off. Refer to the Maintenance section for specific procedures.

Maintenance Code	Required Maintenace
P25	Change engine oil
P50	Change engine oil, clean air filter
P100	Change engine oil, clean air filter

⚠ WARNING

Accidental start-up. Disconnect the spark plug boot from the spark plug and disconnect the battery quick-connect plugs when performing maintenance on the generator.

MAINTENANCE SCHEDULE

Regular maintenance will improve performance and extend the service life of the generator. Follow the hourly or calendar intervals, whichever occurs first. More frequent service is required when operating in adverse conditions as noted below.

Before Each Use
Check engine oil
After First 25 Hours or First Month
Change engine oil
After 50 Hours or Every 6 Months
Change engine oil[1] Clean air filter[2]
After 100 Hours or Every 6 Months
Inspect/clean spark arrestor Inspect/clean spark plug Inspect/adjust valve clearance[3]
After 300 Hours or Every Year
Replace spark plug Replace air filter

[1] Change oil every month when operating under heavy load or in high temperatures.

[2] Clean more often under dirty or dusty conditions. Replace air filter if it cannot be adequately cleaned.

[3] Recommend service to be performed by authorized Westinghouse service dealer.

MAINTENANCE REPLACEMENT PARTS

Description	Part Number
Air filter	5692
Oil drain plug crush washer	94004
Spark arrestor	6866
Battery, 14 AH	511012
Spark plug	97108

AIR FILTER MAINTENANCE

⚠ WARNING

Fire hazard. Never use gasoline or other flammable solvents to clean the air filter. Use only household detergent soap to clean the air filter.

The air filter must be cleaned after every 50 hours of use or six months (frequency should be increased if the generator is operated in a dusty environment).

1. Place the generator on a level surface and allow the engine to cool for several minutes.
2. Release the top and bottom clips then remove the air filter cover.

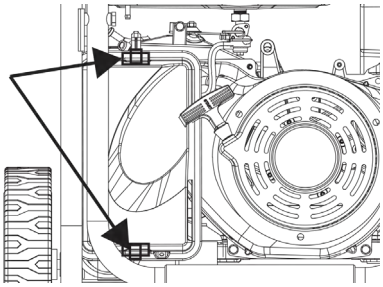

3. Remove the air filters. Use compressed air to clean the coarse air filter.

Note: The foam air filter element is oil soaked. Use an appropriate cleaning container.

NOTICE

Avoid skin contact with engine oil. Wear protective clothing and equipment. Wash all exposed skin with soap and water.

4. Remove the foam air filter and wash it by submerging the element in a solution of household detergent soap and warm water. Slowly squeeze the foam to thoroughly clean.

NOTICE

DO NOT twist or tear the foam air filter element during cleaning or drying. Only apply slow but firm squeezing action.

5. Rinse the air filter element by submerging it in fresh water and applying a slow squeezing action. Allow the filter to dry thoroughly.

NOTICE

Do not pollute. Follow the guidelines of the EPA or other governmental agencies for proper disposal of hazardous materials. Consult local authorities or reclamation facility.

6. Dip the foam air filter in clean engine oil then squeeze out all excess oil. The engine will smoke when started if too much oil is left in the filter.

7. Install the foam air filter in the housing, then the coarse air filter. Install the air cleaner cover and secure with the cover clips.

ENGINE OIL LEVEL CHECK

⚠ CAUTION

Avoid skin contact with engine oil. Wear protective clothing and equipment. Wash all exposed skin with soap and water.

NOTICE

Always use the specified engine oil. Failure to use the specified engine oil can cause accelerated wear and/or shorten the life of the engine.

When using the generator under extreme, dirty, dusty conditions or in extremely hot weather, change the oil more frequently.

Ambient air temperature will affect engine oil performance. Change the type of engine oil used based on weather conditions.

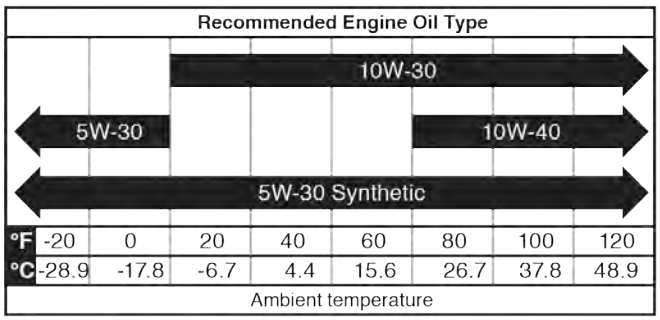

Check the engine oil level before each use or every 8 hours of operation.

1. Place the generator on a level surface and allow the engine to cool for several minutes.

2. With a damp rag, clean around the oil dipstick.

3. Remove the oil dipstick and wipe the dipstick clean.

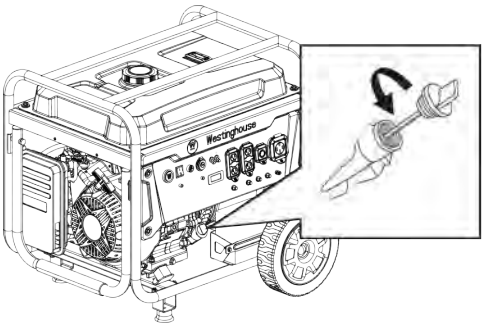

4. Insert the dipstick into the oil filler neck without screwing it in. Remove the dipstick and verify that the oil level is within safe operating range between the low (L) and high (H) marks on the dipstick.

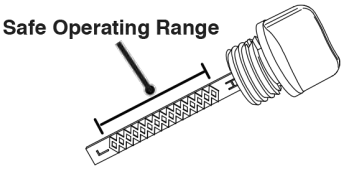

5. If low, add recommended engine oil incrementally and recheck until the level is between the L and H marks on the dipstick. DO NOT overfill. If over the full mark on the dipstick, drain the oil to reduce the oil level to the full mark.

6. Replace the oil dipstick and hand-tighten.

ENGINE OIL CHANGE

When using the generator under extreme, dirty, dusty conditions or in extremely hot weather, change the oil more frequently. Change the oil while the engine is still warm from operation.

1. Place the generator on a level surface and allow the engine to cool for several minutes.

2. With a damp rag, clean around the oil dipstick. Remove the dipstick and wipe clean.

3. Place an oil pan (or suitable container) under the oil drain bolt.

4. Using a 10mm wrench, remove the oil drain bolt and allow the oil the to drain.

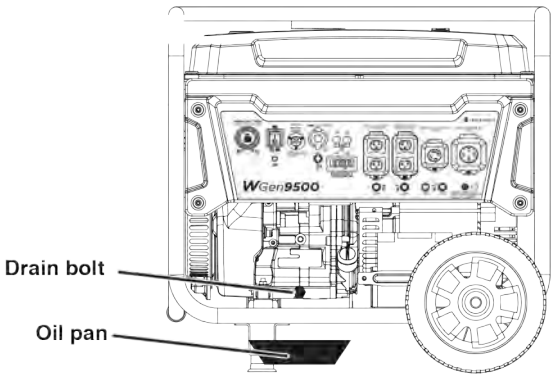

5. Install the oil drain bolt and tighten securely.

Note: A new oil drain plug crush washer is recommended at each oil change.

6. Slowly pour oil into the oil filler neck until oil the level is between the L and H marks on the dipstick. Stop frequently to check the oil level. DO NOT overfill.

Maximum oil capacity: 1.16 Quart (1.1 Liter)

7. Install the oil dipstick and hand-tighten.

NOTICE

Do not pollute. Follow the guidelines of the EPA or other governmental agencies for proper disposal of hazardous materials. Consult local authorities or reclamation facility.

SPARK PLUG MAINTENANCE

Inspect and clean the spark plug after every 100 hours of use or six months. Replace the spark plug after 300 hours of use or every year.

1. Place the generator on a level surface and allow the engine to cool.
2. Remove the spark plug boot by firmly pulling the spark boot directly away from the engine.
3. Clean the area around the spark plug.
4. Remove the spark plug with the included spark plug socket wrench.

NOTICE

Never apply any side load or move the spark plug laterally when removing the spark plug.

5. Inspect the spark plug. Replace if electrodes are pitted, burned, or the insulator is cracked. Only use a recommended replacement plug.
6. Measure the spark plug electrode gap with a wire-type feeler gauge. If necessary, correct the gap by carefully bending the side electrode.

Spark plug gap: 0.024 – 0.032 in. (0.60 – 0.80 mm)

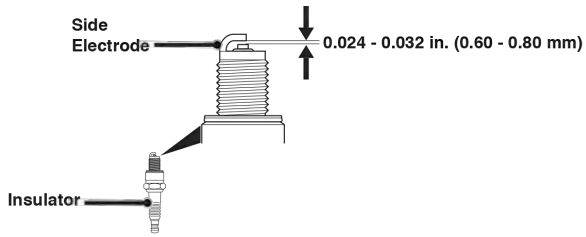

7. Carefully install the spark plug finger tight, then tighten as additional 3/8 to 1/2 turn with the spark plug wrench.
8. Attach the spark plug boot.

SPARK ARRESTOR SERVICE

Allow the muffler to cool completely before servicing the spark arrestor. Check and clean the spark arrestor after every 100 hours of use or six months. Failure to clean the spark arrestor will result in degraded engine performance.

1. Place the generator on a level surface.
2. Remove the cover screws and the muffler cover. Use a screw driver to remove the spark arrestor.

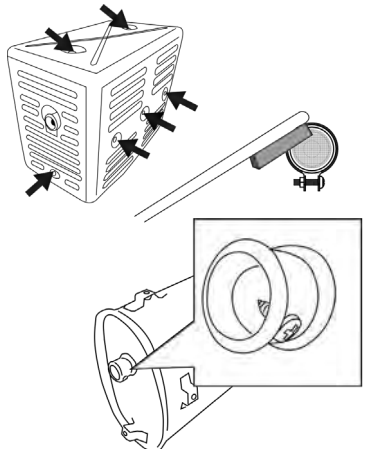

3. Carefully remove the carbon deposits from the spark arrestor screen with a wire brush. The spark arrestor must be free of breaks and tears. Replace the spark arrestor if damaged.
4. Reinstall the spark arrestor and muffler cover.

MAINTENANCE

BATTERY MAINTENANCE

The battery shipped with the generator has been fully charged. A battery may lose some charge when not in use for prolonged periods of time.

Note: Once started, the generator will charge the battery after 30–60 minutes of use.

The included trickle charger can remain connected and will maintain the battery for an indefinite period of time. A red light on the charger indicates charging in progress. A green light indicates charging complete. Charge in a dry location.

1. Plug the charger into the battery charging port on the control panel.
2. Plug the wall receptacle end of the battery charger into a 120 Volt AC wall outlet.

BATTERY REPLACEMENT

⚠ WARNING

Burn hazard. The battery contains sulfuric acid (electrolyte) which is highly corrosive and poisonous. Wear protective clothing and eye protection when working near the battery. Keep children away from the battery.

⚠ CAUTION

Battery posts, terminals contain lead and lead compounds. Wash hands after handling.

1. Loosen and remove the bolt on the battery hold-down plate and swing the plate out.
2. Disconnect the quick-connect plugs and remove the battery from the unit.
3. Disconnect the quick-disconnect cable leads from the battery.
4. On the replacement battery, connect the white (-) quick-connect cable to the battery negative terminal. Slide the rubber boot over the connection hardware.
5. Connect the red (+) quick-connect cable to the battery positive terminal. Slide the rubber boot over the connection hardware.
6. Install the battery into the generator. Reinstall the battery hold-down plate and tighten the bolt.
7. Connect the quick-connect plug.

NOTICE

Dispose of the used battery properly according to the guidelines established by your local or state government.

STORAGE

Proper storage preparation is required for trouble-free operation and generator longevity.

NOTICE

Gasoline stored for as little as 30 days can deteriorate, causing gum, varnish, and corrosive buildup in fuel lines, fuel passages, and the engine. This corrosive buildup restricts the flow of fuel, which can prevent the engine from starting after a prolonged storage period. The use of fuel stabilizer significantly increases the storage life of gasoline. Full-time use of fuel stabilizer is recommended. Follow the manufacturer's instructions for use.

STORAGE TIME	RECOMMENDED PROCEDURE
Less than 1 month	No service required.
2 to 6 months	Fill with fresh gasoline and add gasoline stabilizer. Drain the carburetor float bowl.
6 months or longer	Drain the fuel tank and carburetor float bowl.

SHORT TERM STORAGE

- Allow the generator to cool a minimum of 30 minutes before storage.
- Replace all protective covers on the generator control panel.
- Wipe the generator with a moist cloth. Clean any debris from the muffler cooling vents.
- Store the generator in a well-ventilated, dry location away from sparks, open flames, pilot lights, heat, and other sources of ignition such as areas with a spark-producing electric motor or where power tools are operated.
- Do not store the generator or gasoline near furnaces, water heaters, or any other appliances that produce heat or have automatic ignitions.
- With the engine and exhaust system cool and all surfaces dry, cover the generator to keep out dust. Do not use a plastic sheet as a dust cover. Non-porous materials trap moisture and promote rust and corrosion.

LONG TERM STORAGE

Even properly stabilized fuel can leave residue and cause corrosion if left long term. If storing the generator for two to six months, drain the float bowl to prevent gum and varnish buildup in the carburetor.

DRAINING THE FLOAT BOWL

1. Turn the fuel tank valve to the OFF position.
2. Locate the drain screw on the bottom of the carburetor float bowl.

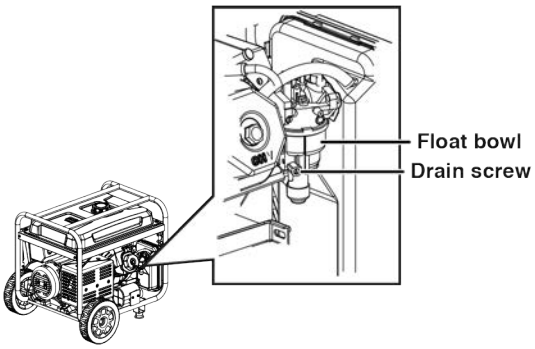

3. Place an appropriate gasoline container under the drain screw to catch the drained fuel.
4. Loosen the float bowl drain screw and allow the fuel to drain. Tighten the float bowl drain screw.

DRAINING THE FUEL TANK

If storing the generator for longer than six months, drain the fuel tank to prevent fuel separation, deterioration, and deposits in the fuel system.

1. Unscrew the fuel tank cap. Remove the fuel screen filter by slightly compressing it while removing it from the tank.
2. Using a commercially available gasoline hand pump (not included), siphon the gasoline from the fuel tank into an approved gasoline container. DO NOT use an electric pump.
3. Reinstall the fuel screen filter and the fuel tank cap.
4. Start the generator and allow it to run until the generator engine stops.
5. Push the battery switch to the OFF position.
6. Disconnect the battery quick-connect plugs.
7. Remove the spark plug.
8. Put a teaspoon of engine oil into the cylinder and pull the recoil handle until resistance is felt. At this position the piston is coming up on its compression stroke and both valves are closed. Storing the engine in this position will help prevent internal corrosion. Return the recoil handle gently.
9. Reinstall the spark plug. Leave the spark plug boot disconnected to prevent accidental starting.

VALVE CLEARANCE

NOTICE

Checking and adjusting valve clearance must be done when the engine is cold.

1. Remove the rocker arm cover and carefully remove the gasket. If the gasket is torn or damaged, it must be replaced.
2. Remove the spark plug so the engine can be rotated more easily.
3. Rotate the engine to top dead center (TDC) by pulling the recoil handle slowly. Looking through the spark plug hole, the piston should be at the top (both valves are closed).
4. Both the rocker arms should be loose at TDC on the compression stroke. If they are not, rotate the engine 360°.
5. Insert a feeler gauge between the rocker arm and the valve stem to measure valve clearance.

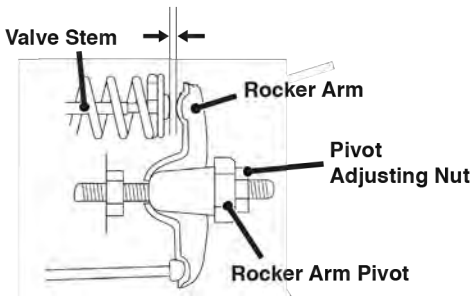

	Intake Valve	Exhaust Valve
Valve Clearance	0.0031 – 0.0047 in (0.08 – 0.12 mm)	0.0051 – 0.0067 in (0.13 – 0.17 mm)
Torque	8-12 N•m	8-12 N•m

6. If an adjustment is necessary, hold the rocker arm pivot and loosen the pivot adjusting nut.
7. Turn the rocker arm pivot to obtain the specified clearance. Hold the rocker arm pivot and re-tighten the pivot adjusting nut to the specified torque.

Torque: 106 inch-pound (12 N•m)

8. Perform this procedure for the other valve.
9. Install the gasket, rocker arm cover, and spark plug.

TROUBLESHOOTING

TROUBLESHOOTING

PROBLEM	POSSIBLE CAUSE	CORRECTION
Engine will not start	Battery switch in the OFF position.	Turn battery switch to the ON position.
	Out of fuel.	Refuel.
	Bad fuel, generator stored without treating or draining gasoline, or refueled with bad gasoline.	Drain the fuel tank. Refuel with fresh gasoline.
	Dirty air filter.	Clean the air filter.
	Low engine oil level stopped generator.	If low oil LED illuminated, turn battery switch to the OFF position. Add engine oil.
	Spark plug wet with fuel (flooded engine).	Wait five minutes. Turn battery switch to the OFF position. Pull recoil handle rapidly several times. If the generator does not start, remove spark plug and dry.
	Spark plug faulty, fouled, or improperly gapped.	Gap or replace the spark plug. Reinstall.
	Fuel filter restricted, fuel system malfunction, fuel pump failure, ignition malfunction, valves stuck, etc.	Contact Westinghouse customer service toll-free at 1 (855) 944-3571.
	Battery drained.	Use the recoil handle to start the generator.
		Charge the battery.
	Choke partially open or closed due to weak or disconnected battery.	Manually set the choke. See Maintenance section.
Engine starts, then shuts down	Out of fuel.	Refuel.
	Incorrect engine oil level.	Check engine oil level.
	Dirty air filter.	Clean the air filter.
	Contaminated fuel.	Drain the fuel tank. Refuel with fresh gasoline.
	Defective low oil level switch.	Contact Westinghouse customer service toll-free at 1 (855) 944-3571.
Engine lacks power	Air filter restricted.	Clean or replace air filter.
	Bad fuel, generator stored without treating or draining gasoline, or refueled with bad gasoline.	Drain the fuel tank. Refuel with fresh gasoline.
	Fuel filter restricted, fuel system malfunction, fuel pump failure, ignition malfunction, valves stuck, etc.	Contact Westinghouse customer service toll-free at 1 (855) 944-3571.
Engine runs rough or bogs when load applied	Dirty air filter.	Clean the air filter.
	Generator overloaded.	Unplug some devices.
	Faulty power tool or appliance.	Replace or repair tool or appliance. Stop and restart the engine.
	Fuel filter restricted, fuel system malfunction, fuel pump failure, ignition malfunction, valves stuck, etc.	Contact Westinghouse customer service toll-free at 1 (855) 944-3571.
No power at AC receptacles	AC circuit breaker/s tripped.	Check AC loads and reset circuit breaker/s.
	Faulty power tool or appliance.	Replace or repair tool or appliance. Stop and restart the engine.
	Faulty generator.	Contact Westinghouse customer service toll-free at 1 (855) 944-3571.

EXPLODED VIEW A

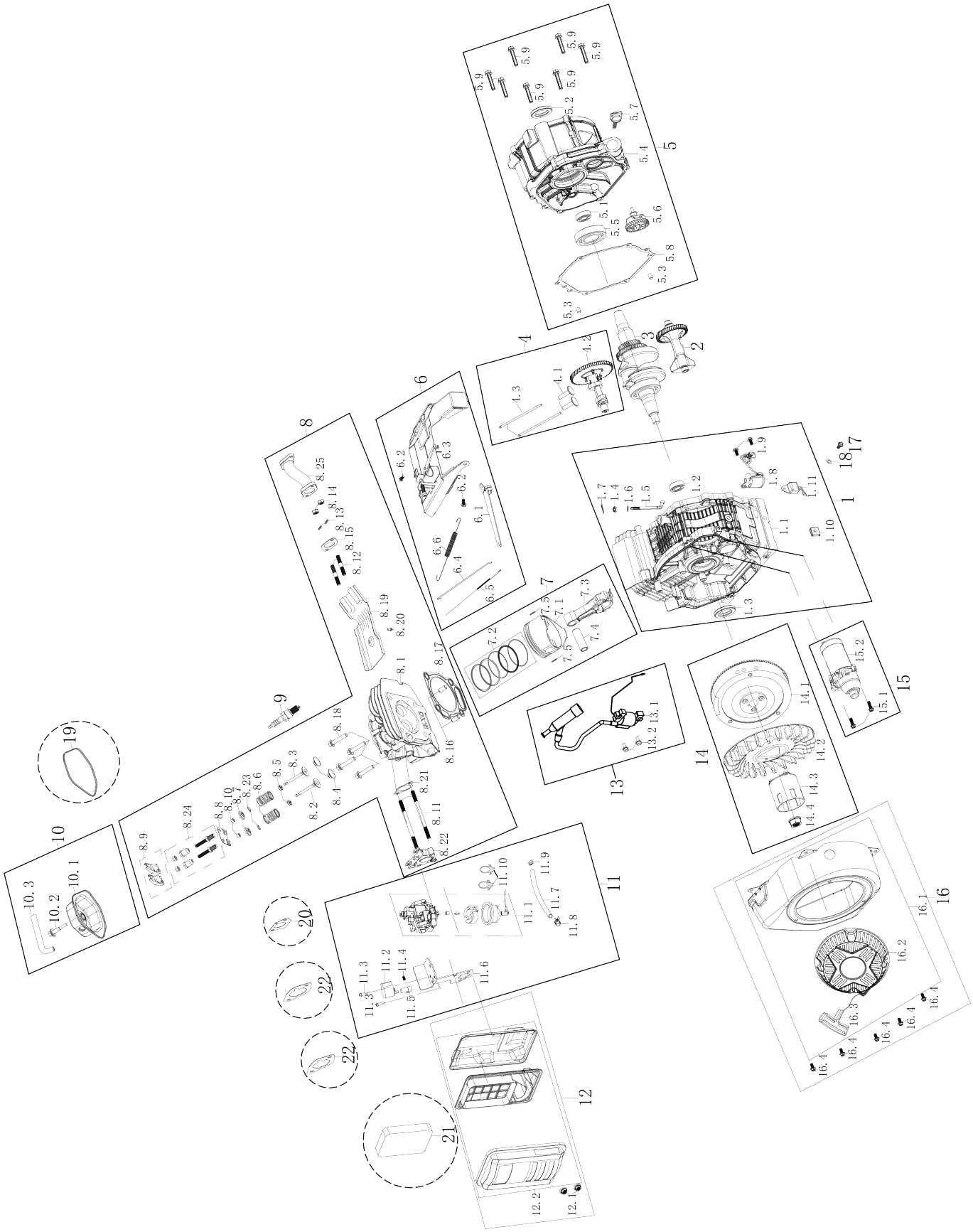

EXPLODED VIEW

EXPLODED VIEW A

NO.	PART#	DESCRIPTION
1		CRANKCASE ASSEMBLY
1.1	270203	CRANKCASE
1.2	93002	AXLE BEARING
1.3	93512	CRANKCASE OIL SEAL
1.4	93514	SWING ROD OIL SEAL
1.5	263901	RACKING BAR
1.6	96806	SWINGING ROD GASKET
1.7	263902	RETAINING CLIP
1.8	265102	OIL SENSOR ASSEMBLY
1.9	91329	BOLT M6X16
1.10	269901	RUBBER CABLE BLOCK
1.11	245104	CHARGING COIL
2	270304	BALANCE SHAFT
3	270305	CRANKSHAFT
4		ALTERNATOR KIT ASSEMBLY
4.1	266102	VALVE LIFTER
4.2	272003	CAMSHAFT ASSEMBLY
4.3	261901	PUSH ROD
5		CRANKCASE COVER ASSEMBLY
5.1	93002	AXLE BEARING
5.2	93512	CRANKCASE OIL SEAL
5.3	240904	CRANKCASE LOCATING PIN
5.4	270102	CRANKCASE COVER
5.5	93015	AXLE BEARING
5.6	274301	CENTRIFUGAL GOVERNOR GEAR ASSEMBLY
5.7	265604-295	DIPSTICK
5.8	96092	CRANKCASE SEAL WASHER
5.9	91349	BOLT M8X40
6		SPEED GOVERNOR ASSEMBLY
6.1	264001	SPEED REGULATING ARM
6.2	91325	BOLT M6X12
6.3	274401	SHROUD ASSEMBLY, UPPER
6.4	262701	THROTTLE LEVER
6.5	264201	SPRING C
6.6	274101	SPRING B
7		PISTON & PISTON RING ASSEMBLY
7.1	271204	PISTON
7.2	271602	PISTON RING ASSEMBLY
7.3	271501	CONNECTING ROD ASSY
7.4	275501	PISTON PIN
7.5	261301	PISTON PIN RING
8		CYLINDER HEAD ASSEMBLY
8.1	271002	CYLINDER HEAD
8.2	271702	INTAKE VALVE
8.3	275902	EXHAUST VALVE
8.4	261807	AIR INLET SPRING LOWER SEAT
8.5	93513	VALVE SEAL
8.6	266002	VALVE SPRING
8.7	261805	AIR INLET SPRING SEAT
8.8	262201	VALVE RETAINER ASSEMBLY
8.9	262101	ROCKING ARM
8.10	261806	TOP CAP
8.11	91016	AIR INLET STUD STUD BOLT
8.12	91007	AIR EXHAUST STUD STUD BOLT

NO.	PART#	DESCRIPTION
8.13	94206	SPRING WASHER
8.14	90011	NUT M8
8.15	96083	EXHAUST SEAL WASHER
8.16	260901	CYLINDER HEAD LOCATING PIN
8.17	96093	CYLINDER HEAD GASKET
8.18	91321	SCREW M10X80
8.19	270501	WIND-LEAD-COVER
8.20	91325	BOLT M6X12
8.21	96078	AIR INTAKE GASKET
8.22	262301	CARBURETOR CONNECTION BLOCK
8.23	260802	VALVE LOCK CLAMP
8.24	91818	ROCKING ARM TIGHTENING BOLT
8.25	95207	MUFFLER CONNECTING PIPE
9	97108	SPARK PULG
10		CYLINDER HEAD COVER ASSEMBLY
10.1	261104	CYLINDER HEAD COVER
10.2	91819	CYLINDER HEAD COVER FASTENING BOLT
10.3	95606	BLAST PIPE
11		CARBURETOR ASSEMBLY
11.1	272810	CARBURETOR
11.2	249904	STEPPER MOTOR
11.3	92007	SCREW M4X8
11.4	244202	SPRING
11.5	249905	STEPPER MOTOR DRIVE SHAFT
11.6	269909	BRACKET
11.7	95713L	FUEL LINE
11.8	94403	FUEL LINE CLAMP
11.9	94401	FUEL LINE SLEEVE
11.10	260801	CABLE CLIP
12		AIR FILTER ASSEMBLY
12.1	90016	NUT M6
12.2	272902-052	AIR FILTER ASSEMBLY
13		IGNITOR ASSEMBLY
13.1	97518	IGNITER
13.2	91331	BOLT M6X25
14		FLYWHEEL ASSEMBLY
14.1	270401	FLYWHEEL ASSEMBLY
14.2	264601	IMPELLER
14.3	264501	STARTER PULLEY
14.4	90004	FLYWHEEL NUT
15		STARTER MOTOR ASSEMBLY
15.1	91348	BOLT M8X35
15.2	97415	STARTING MOTOR ASSEMBLY
16		RECOIL STARTER ASSEMBLY
16.1	274716-221B	STARTER ASSEMBLY
16.2	5910-221	RECOIL STARTER ASSEMBLY
16.3	5943	PULLING HANDLE
16.4	91325	BOLT M6X12
17	91817	OIL DRAIN BOLT
18	94004	OIL DRAIN BOLT WASHER
19	96075	HEADCOVER SEAL WASHER
20	96081	CARBURETOR GASKET
21	5692	AIR FILTER
22	96086	AIR FILTER GASKET

EXPLODED VIEW B

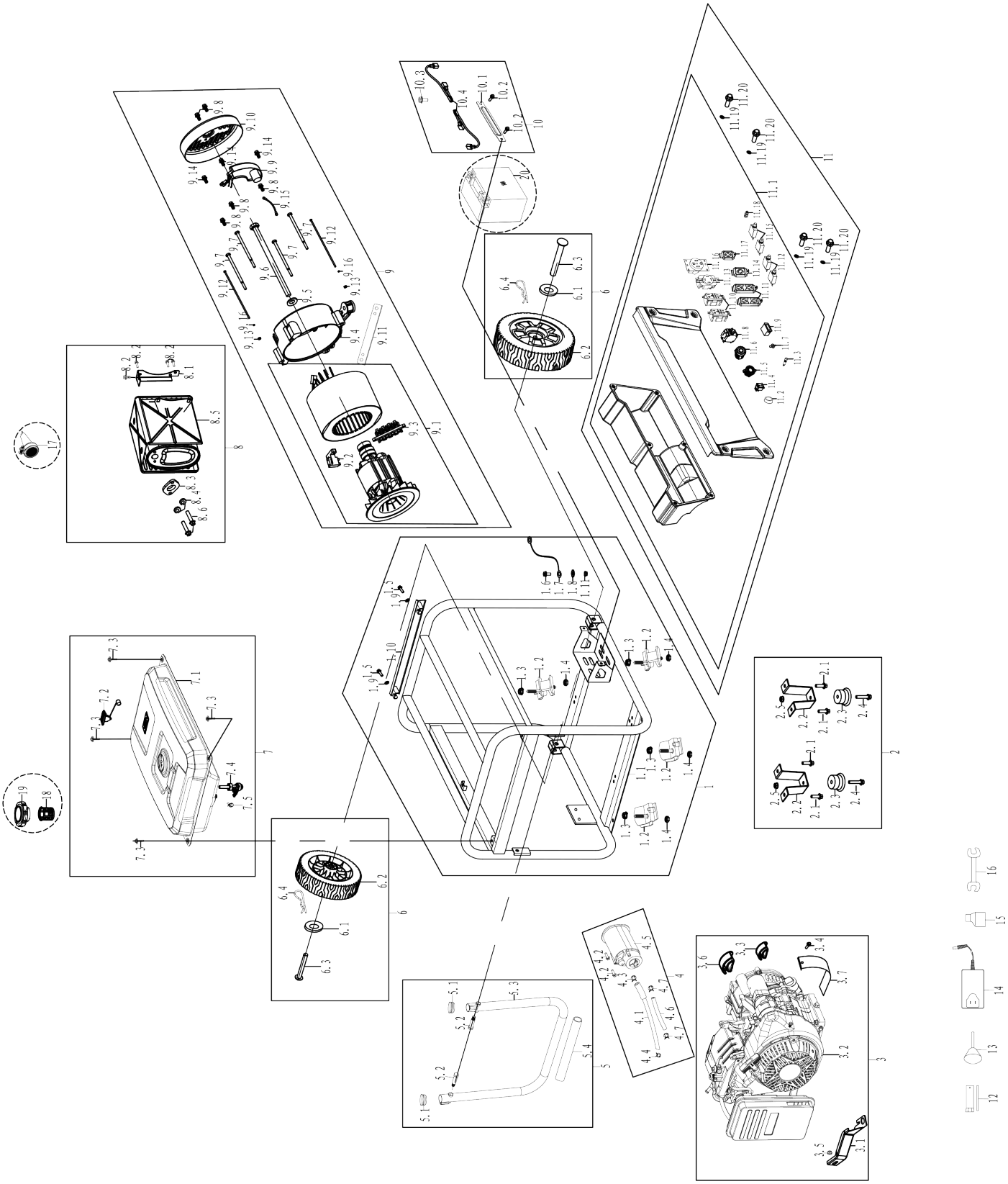

EXPLODED VIEW

EXPLODED VIEW B

NO.	PART#	DESCRIPTION
1	60070024	FRAME ASSEMBLY
1.1	774013-116	FRAME
1.2	531314	DAMPING BEARING B
1.3	90013	NUT M10
1.4	90011	NUT M8
1.5	91327	BOLT M6X12
1.6	91343	BOLT M8X16
1.7	544307	FRAME WIRE
1.8	94009	TOOTH WASHER
1.9	96120	PAPER WASHER
1.10	530606-116	FUEL TANK BRACKET
1.11	90018	NUT M8
2	60150029	FOOT BRACKET ASSEMBLY
2.1	91343	BOLT M8X16
2.2	525608-116	SUPPORT,FRAME
2.3	531115	RUBBER PAD
2.4	91333	BOLT M6X28
2.5	90023	LOCK NUT M6
3	60210004	AIR FILTER BRACKET ASSEMBLY
3.1	540602	AIR FILTER BRACKET
3.2	1148457120036	ENGINE ASSEMBLY
3.3	549605	DUST BOARD
3.4	91322	BOLT M5X12
3.5	90016	NUT M6
3.6	549604	DUST BOARD
3.7	539602	CRANKCASE COVER
4	60570003	CARBON CANNISTER KIT ASSEMBLY
4.1	95123	CARBON CANISTER AND FUEL TANK CONNECTING PIPE
4.2	91327	BOLT M6X12
4.3	94423	FUEL HOSE CLAMP
4.4	94408	FUEL HOSE CLAMP
4.5	543601L	CANISTER ASSEMBLY
4.6	95124	CARBON CANISTER AND AIR FILTER CONNECTING PIPE
4.7	94402	FUEL HOSE CLAMP
5	60180029	HANDLE ASSEMBLY
5.1	527603	PLUG
5.2	527612	BOLT M10
5.3	526620-116	HANDLE ASSEMBLY
5.4	528607	RUBBER,HANDLE
6	60060030	WHEEL ASSEMBLY
6.1	94207	FLAT WASHER
6.2	523646	WHEEL
6.3	524619	AXLE
6.4	548302	COTTER PIN
7	60010037	FUEL TANK ASSEMBLY
7.1	700375L-116	FUEL TANK
7.2	6861	FUEL GAUGE
7.3	91460	BOLT M6X25
7.4	518202	FUEL SWITCH
7.5	94403	FUEL LINE CLAMP
8	60030031	MUFFLER ASSEMBLY
8.1	520305	MUFFLER BRACKET
8.2	91343	BOLT M8X16
8.3	96002	MUFFLER CONNECTING PIPE GASKET
8.4	94206	SPRING WASHER

NO.	PART#	DESCRIPTION
8.5	705944	MUFFLER ASSEMBLY
8.6	91347	BOLT M8X30
9	60140043	ALTERNATOR ASSEMBLY
9.1	759016	ROTOR STATOR ASSEMBLY
9.2	599019	CARBON BRUSH
9.3	6560	TERMINAL ASSEMBLY
9.4	532301	REAR BEARING CARRIER
9.5	96813	GASKET
9.6	91717	BOLT M10X1.25X283
9.7	91614	BOLT M6X200
9.8	91322	BOLT M5X12
9.9	534813	AVR
9.10	533302-221	ALTERNATOR COVER
9.11	532303-052	TAIL BRACKET FIXING PLATE
9.12	91512	BOLT M5X230
9.13	90009	NUT M5
9.14	91323	M5X16
9.15	544610	SHORT CIRCUITING CONNECTION
9.16	94204	SPRING WASHER
10	60200010	BATTERY COMPONENTS
10.1	542802-116	BATTERY PLATE
10.2	91327	BOLT M6X12
10.3	91325	BOLT M6X12
10.4	60040040	BATTERY CABLE KIT
11	511012	CONTROL PANEL ASSEMBLY
11.1	714354	PANEL COMPLETE
11.2	536002	SWITCH
11.3	6393	INDICATOR LIGHT
11.4	6502	IGNITION SWITCH
11.5	6488	SMART SWITCH
11.6	6796	DC SOCKET
11.7	6387	SOCKET
11.8	6434-38	BREAKER
11.9	6041	DATA CENTER
11.10	6275	SOCKET
11.11	6845	WATERPROOF CAP
11.12	6439-20	22A THERMAL PROTECTOR
11.13	6385	SOCKET
11.14	6848	WATERPROOF CAP
11.15	6439-30	22A THERMAL PROTECTOR
11.16	6254	SOCKET
11.17	6850	WATERPROOF CAP
11.18	6386	GROUND BOLT ASSEMBLY
11.19	96120	PAPER WASHER
11.20	91327	BOLT M6X12
12	99010	SPARK PLUG WRENCH
13	99504	FUNNEL
14	511076	CHARGER
15	99546	OIL BOTTLE
16	99025	WRENCH 10 & 13 MM ENDS
17	6866	SPARK ARRESTER
18	518801	FUEL TANK FILTER
19	519215	FUEL TANK CAP
20	511012	BATTERY

SCHEMATICS

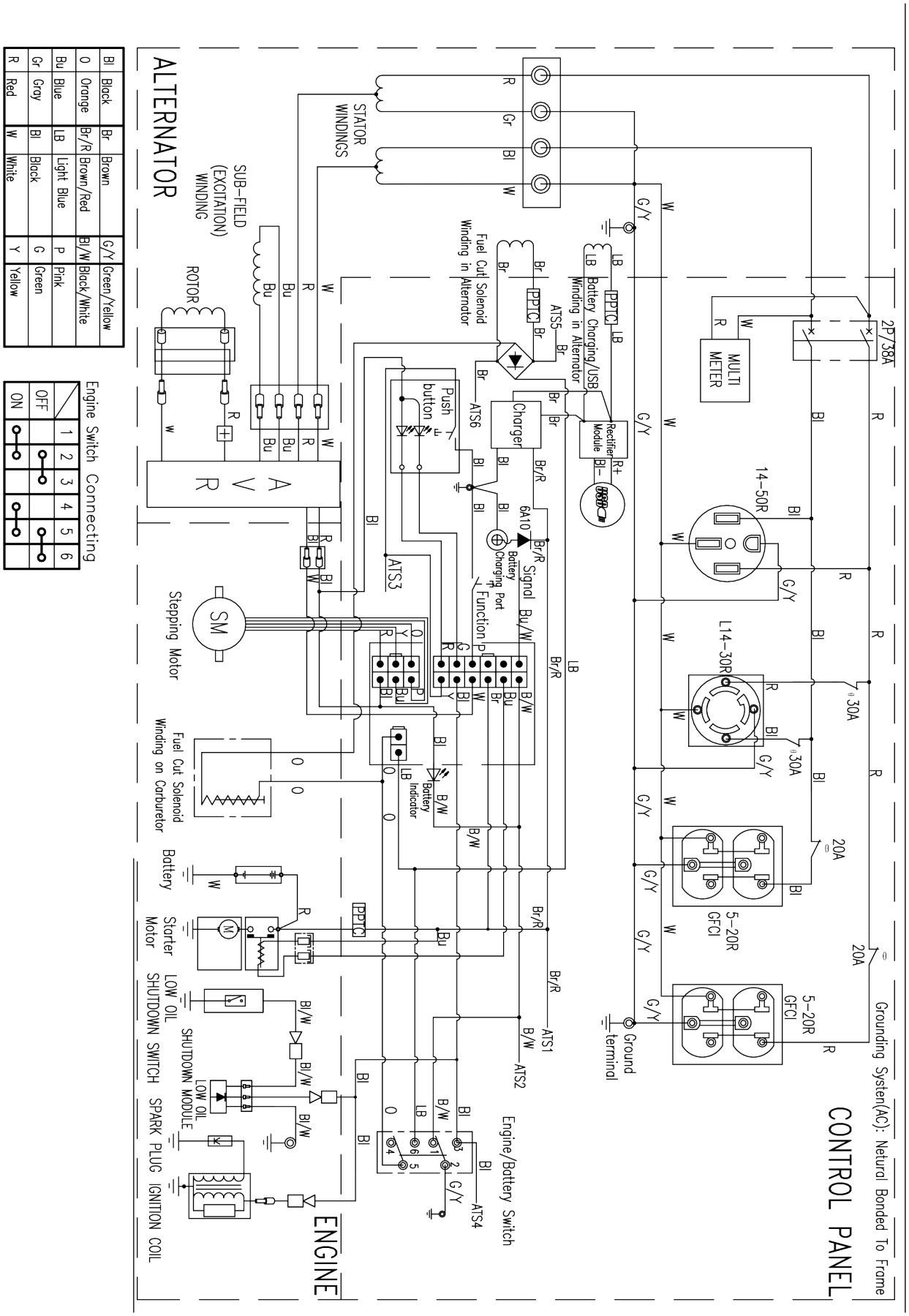
CONTROL PANEL
Grounding System(AC): Netural Bonded To Frame
2P/38A
MULTI METER
14-50R
L14-30R
30A
20A
5-20R GFCI
Ground terminal
Rectifier Module
Battery Charging/USB Winding in Alternator
Fuel Cut Solenoid Winding in Alternator
Charger
Push button
Signal
Battery Charging Port
Function
Battery Indicator
ATS1
ATS2
ATS3
ATS4
ATS5
ATS6
6A10
PPTC
ALTERNATOR
STATOR WINDINGS
SUB-FIELD (EXCITATION) WINDING
ROTOR
AVR
SM
Stepping Motor
Fuel Cut Solenoid Winding on Carburetor
Battery
Starter Motor
LOW OIL SHUTDOWN SWITCH
LOW OIL SHUTDOWN MODULE
SPARK PLUG
IGNITION COIL
ENGINE
Engine/Battery Switch
Engine Switch Connecting
OFF
ON
Bl Black
O Orange
Bu Blue
Gr Gray
R Red
Br Brown
Br/R Brown/Red
LB Light Blue
Bl Black
W White
G/Y Green/Yellow
Bl/W Black/White
P Pink
G Green
Y Yellow