Westinghouse

USER MANUAL

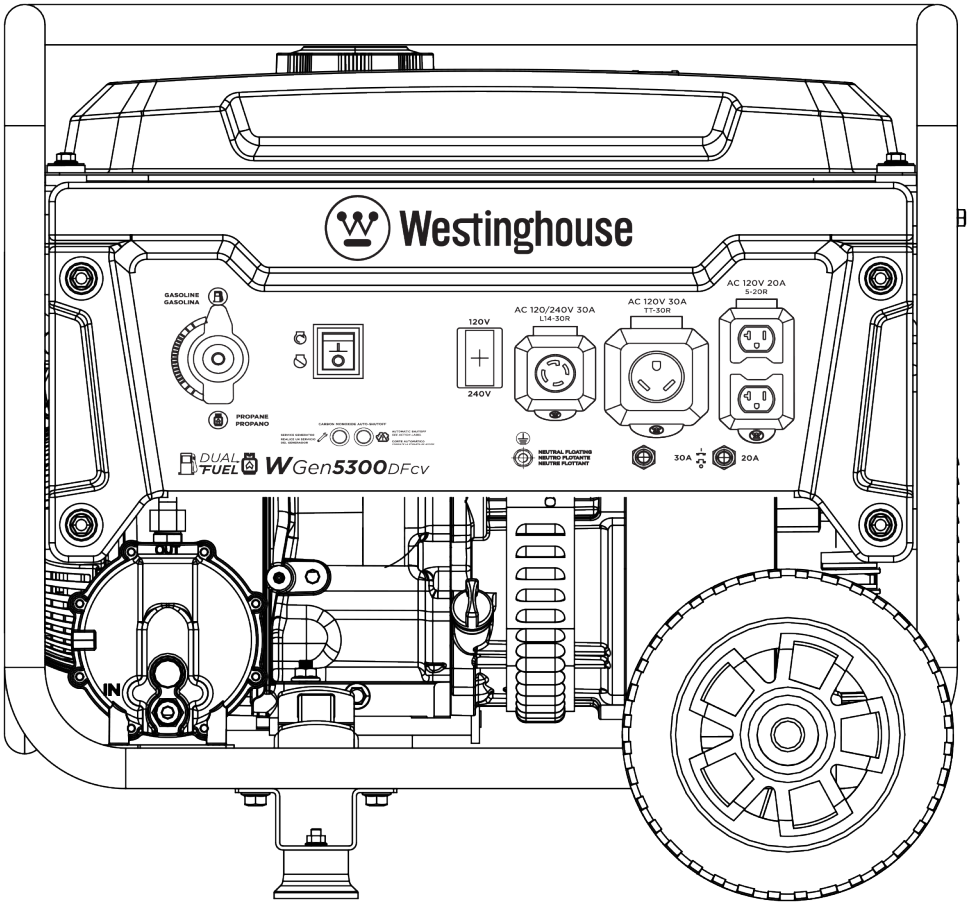

WGen5300DFcv

Dual Fuel Portable Generator

Gasoline: 5300 Running Watts | 6500 Peak Watts
Propane: 4800 Running Watts | 5800 Peak Watts

DO NOT RETURN THIS PRODUCT TO THE STORE

If you have questions or need assistance, please call customer service at 855-944-3571.

INTRODUCTION

TABLE OF CONTENTS

INTRODUCTION
DISCLAIMERS....2
ALL RIGHTS RESERVED....2
SPECIFICATIONS....3

SAFETY
SAFETY DEFINITIONS....4
SAFETY SYMBOLS....4
SAFETY INSTRUCTIONS....5
SAFETY LABELS....8
SAFETY LABELS....9
CO SENSOR....10
ACTION LABEL....10
CONTROL PANEL CO AUTO-SHUTOFF....10

COMPONENTS
CONTROL PANEL COMPONENTS....11
GENERATOR COMPONENTS....12

ASSEMBLY
CARTON CONTENTS....13
INSTALL FEET AND WHEELS....13
INITIAL OIL FILL....14
FUEL....14
CONNECT AN LPG/PROPANE TANK....15

OPERATION
GENERATOR LOCATION....17
GROUNDING....17
HIGH ALTITUDE OPERATION....17
VOLTAGE SELECTOR SWITCH....18
FUEL SELECTOR SWITCH....18
BREAK-IN PERIOD....18
BEFORE STARTING THE GENERATOR....18
STARTING THE ENGINE: GASOLINE....18
STARTING THE ENGINE: PROPANE....18
SWITCHING FUEL SOURCES....19
STOPPING THE ENGINE....19
FREQUENCY OF USE....19
AC CIRCUIT BREAKERS....19
GENERATOR CAPACITY....19
POWER MANAGEMENT....20
EXTENSION CORDS....20
TRANSPORTING....21

MAINTENANCE
MAINTENANCE SCHEDULE....22
MAINTENANCE REMINDERS....22
MAINTENANCE REPLACEMENT PARTS....22
AIR FILTER MAINTENANCE....22
ENGINE OIL LEVEL CHECK....23
ENGINE OIL CHANGE....23
SPARK PLUG MAINTENANCE....24
FUEL VALVE MAINTENANCE....24
SPARK ARRESTOR SERVICE....25
STORAGE....25
VALVE CLEARANCE....26

TROUBLESHOOTING
TROUBLESHOOTING....27

EXPLODED VIEWS AND PARTS LIST
ENGINE EXPLODED VIEW....29
ENGINE PARTS LIST....30
GENERATOR EXPLODED VIEW....32
GENERATOR PARTS LIST....33

SCHEMATICS
SCHEMATICS....35

⚠ **WARNING:** Operating, servicing, and maintaining this equipment can expose you to chemicals including engine exhaust, carbon monoxide, phthalates, and lead, which are known to the State of California to cause cancer and birth defects or other reproductive harm. To minimize exposure, avoid breathing exhaust, and wear gloves or wash your hands frequently when servicing this equipment. For more information go to www.P65warnings.ca.gov.

DISCLAIMERS

All information, illustrations, and specifications in this manual were in effect at the time of publishing. The illustrations used in this manual are intended as representative reference views only. We reserve the right to make any specification or design change without notice.

ALL RIGHTS RESERVED

All rights reserved. No reproduction allowed in any form without written permission from Westinghouse Outdoor Power Equipment, LLC.

⚠ DANGER

Read this manual before using or performing maintenance on this product. Failure to follow the instructions and safety precautions in this manual can result in serious injury or death.

SAVE THESE INSTRUCTIONS

SPECIFICATIONS

Specifications	
Running Watts:	5300 Gasoline 4800 Propane
Peak Watts:	6500 Gasoline 5800 Propane
Rated Power @1.0 Power Factor:	5.3 kW Gasoline 4.8 kW Propane
Peak Power:	6.5 kVA Gasoline 5.8 kVA Propane
Rated Voltage:	120V/240V
Rated frequency:	60 Hz @ 3600 RPM
Phase:	Single phase
Total Harmonic Distortion:	≤ 23%
Engine Displacement:	274 cc
Starting Type:	Recoil
Fuel Capacity:	4.7 Gallons (18 Liters)
Fuel Type:	Unleaded gasoline 87–93 octane* HD-5 Propane
Oil Capacity:	0.74 Quart (0.7 Liter)
Oil Type:	SAE 10W-30
Spark Plug:	97108 (F7TC)
Spark Plug Gap:	0.024 – 0.032 in. (0.60 – 0.80 mm)
Valve Intake Clearance:	0.0031 – 0.0047 in. (0.08 – 0.12 mm)
Valve Exhaust Clearance:	0.0051 – 0.0067 in. (0.13 – 0.17 mm)
AC Grounding System:	Neutral floating
Voltage Regulator:	AVR
Alternator Type:	Brushed
Maximum Ambient Temperature:	104°F (40°C)
Certifications:	• EPA • CARB

***Ethanol content of 10% or less. **DO NOT** use E15 or E85.

UPDATES

The latest User Manual for your Westinghouse generator can be found under our support tab. **https://westinghouseoutdoorpower.com/pages/manuals**

Or scan the following QR code with your smartphone camera to be directed to the link.

NOTICE

This product is designed and rated for continuous operation at ambient temperatures up to 104°F (40°C). If needed, this product can be operated at temperatures ranging from 5°F (15°C)–122°F (50°C) for short periods. If the product is exposed to temperatures outside of this range during storage, it should be brought back within this range before operation. This product must **ALWAYS** be operated outdoors in a well-ventilated area and far away from doors, windows, and other vents.

Maximum wattage and current are subject to and limited by such factors as fuel BTU content, ambient temperature, altitude, engine conditions, etc. Maximum power decreases about 3.5% for each 1,000 feet above sea level, and will also decrease about 1% for each 10°F (6°C) above 60°F (16°C) ambient temperature.

PRODUCT REGISTRATION

For trouble-free warranty coverage, it is important to register your Westinghouse generator.

You can register by:

- Completing and mailing the product registration card included in the carton.
- Registering your product online at: **https://westinghouseoutdoorpower.com/pages/warranty-registration**
- Scan the following QR code with your smartphone camera to be directed to the mobile registration link.
- Sending the following product information to:

Westinghouse Outdoor Power
Warranty registration
777 Manor Park Drive
Columbus, OH 43228

For Your Records

Date of Purchase: _____

Model Number: _____

Serial Number: _____

Place of Purchase: _____

IMPORTANT: Keep your purchase receipt for trouble-free warranty coverage.

SAFETY

SAFETY

SAFETY DEFINITIONS

The words DANGER, WARNING, CAUTION, and NOTICE are used throughout this manual to highlight important information. Make sure that the meanings of this safety information is known to all who operate, perform maintenance on, or are near the generator.

This safety alert symbol appears with most safety statements. It means attention, become alert, your safety is involved! Read and abide by the message that follows the safety alerts symbol.

⚠ DANGER

Indicates a hazardous situation which, if not avoided, will result in death or serious injury.

⚠ WARNING

Indicates a hazardous situation which, if not avoided, could result in death or serious injury.

⚠ CAUTION

Indicates a hazardous situation which, if not avoided, could result in minor or moderate injury.

NOTICE

Indicates a situation which can cause damage to the generator, personal property, and/or the environment, or cause the equipment to operate improperly.

Note: Indicates a procedure, practice or condition that should be followed for the generator to function in the manner intended.

SAFETY SYMBOLS

Follow all safety information contained in this manual and on the generator.

Symbol	Description
	Safety Alert Symbol
	Electrocution Hazard
	Asphyxiation Hazard
	Burn Hazard. **DO NOT** touch hot surfaces.
	Electrical Shock Hazard
	Fire Hazard
	Maintain Safe Distance
	Lifting Hazard
	Read Manufacturer's Instructions
	DO NOT Operate in Wet Conditions
	Ground. Consult with electrician to determine grounding requirements before operation.

⚠ DANGER

Using a generator indoors CAN KILL YOU IN MINUTES. Generator exhaust contains carbon monoxide. This is a poison you cannot see or smell.

NEVER use inside a home or garage, EVEN IF doors and windows are open.

Only use OUTSIDE and far away from windows, doors, and vents.

SAFETY INSTRUCTIONS

CORRECT USE

Example location to reduce risk of carbon monoxide poisoning ONLY use outside and downwind, far away from windows, doors and vents. Direct exhaust away from occupied spaces

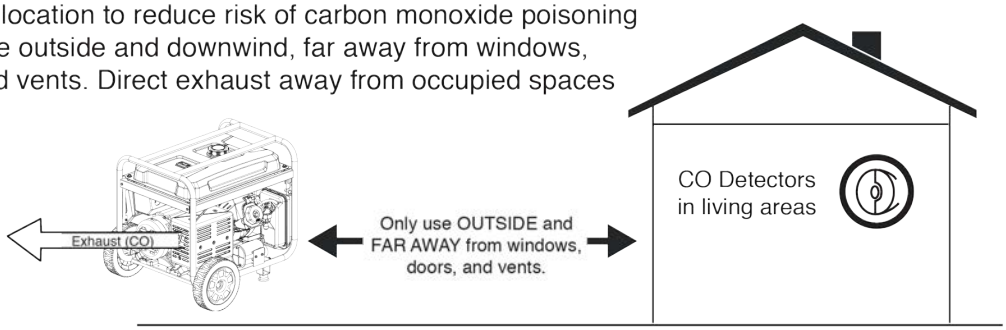

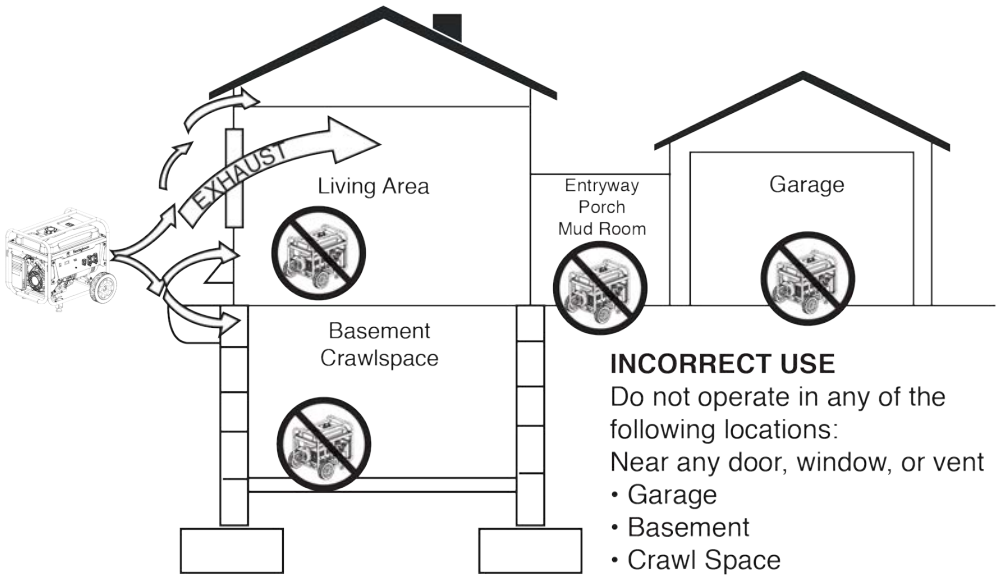

INCORRECT USE

Do not operate in any of the following locations:

Near any door, window, or vent

- Garage
- Basement
- Crawl Space
- Living Area
- Attic
- Entry Way
- Porch
- Mudroom

NOTICE

Install battery-powered carbon monoxide detectors or plug-in carbon monoxide detectors with battery back-up in living areas.

⚠ DANGER

Fire and electrocution hazard. **DO NOT** connect to a building's electrical system unless the generator and transfer switch have been properly installed and the electrical output has been verified by a qualified electrician. The connection must isolate the generator power from utility power and must comply with all applicable laws and electrical codes.

⚠ DANGER

Electrocution hazard. **NEVER** use the generator in a location that is wet or damp. **NEVER** expose the generator to rain, snow, water spray, or standing water while in use. Protect the generator from all hazardous weather conditions. Moisture or ice can cause a short circuit or other malfunction in the electrical circuit.

SAFETY

GENERAL SAFETY PRECAUTIONS

- **NEVER** use the generator to power medical support equipment.
- **DO NOT** operate the generator when you are tired or under the influence of drugs, alcohol, or medication.
- **DO NOT** use generator with electrical cords which are worn, frayed, bare, or otherwise damaged.
- All electrical tools and appliances operated from this generator must be properly grounded by use of a third wire or be double-insulated.
- When this generator is used to supply a building wiring system the generator must be installed by a qualified electrician and connected to a transfer switch as a separately derived system in accordance with NFPA 70, National Electrical Code.
- If you begin to feel sick, dizzy, or weak while using the generator, move to fresh air IMMEDIATELY. See a doctor, as you can have carbon monoxide poisoning.
- Only use OUTSIDE and far away from windows, doors, and vents as recommended by the US Department of Health and Human Services Centers for Disease Control and Prevention. Your specific home and/or wind conditions may require additional distance.
- While operating and storing, keep at least five feet of clearance on all sides of the generator, including overhead. Allow the generator to cool a minimum of 30 minutes before storage. Heat created by the muffler and exhaust gases could be hot enough to cause serious burns and/or ignite combustible objects.
- **DO NOT** touch the muffler or engine. They are very HOT and will cause severe burns. **DO NOT** put body parts or any flammable or combustible materials in the direct path of the exhaust.
- **ALWAYS** remove any tools or other service equipment used during maintenance away from the generator before operating.
- Avoid skin contact with engine oil or gasoline. Wear protective clothing and equipment. Wash all exposed skin with soap and water.
- A transfer switch must be installed by a licensed electrician approved by the authority having jurisdiction. The installation must comply with all applicable laws and electrical codes.

FUEL SAFETY

- Store fuel in a container approved for gasoline.
- **DO NOT** smoke when filling the generator with gasoline.
- **DO NOT** allow the generator's gas tank to overflow when filling.
- Shut down the engine and allow it to cool for two minutes before adding gasoline or oil to the generator.
- **NEVER** remove the fuel cap when the generator is running. Shut off the engine and allow the unit to cool at least two minutes. Remove the fuel cap slowly to release pressure, keep fuel from escaping around the cap, and to avoid the heat from the muffler igniting fuel vapors. Tighten the fuel cap securely after refueling.
- Wipe spilled fuel from the unit.
- **NEVER** attempt to burn off spilled fuel.
- **NEVER** overfill the fuel tank. Leave room for fuel to expand. Overfilling the fuel tank can result in a sudden overflow of gasoline and result in spilled gasoline coming in contact with HOT surfaces.
- Spilled fuel can ignite. If fuel is spilled on the generator, wipe up any spills immediately. Dispose of rag properly. Allow area of spilled fuel to dry before operating the generator.
- Wear eye protection while refueling.
- **NEVER** use gasoline as a cleaning agent.
- Store any containers containing gasoline or LPG/propane in a well-ventilated area, away from any combustibles or source of ignition.

GASOLINE AND GASOLINE VAPOR (GAS)

⚠ DANGER

Fire and explosion hazard. Gasoline and LPG/propane are highly explosive and flammable and can cause severe burns or death.

- In case of a gas fire, **DO NOT** attempt to extinguish the flame if the fuel tank valve is in the ON position. Introducing an extinguisher to a generator with an open fuel valve could create an explosion hazard.
- Gas has a distinctive odor, this will help detect potential leaks quickly.
- Gas vapors can cause a fire if ignited.
- Gasoline is a skin irritant and needs to be cleaned up immediately if it comes in contact with the skin.

LIQUID PETROLEUM GAS (LPG/PROPANE)

⚠ WARNING

Fire and explosion hazard. **NEVER** use a gas container, LPG/propane connector hose, LPG/propane tank or any other fuel item that appears to be damaged.

⚠ CAUTION

Fire and explosion hazard. Only use approved LPG/propane tanks with an Overfilling Prevention Device (OPD) valve. **ALWAYS** keep the tank in a vertical position with the valve on top and placed at ground level on a flat surface. **DO NOT** allow tanks to be near any heat source. When transporting and storing, turn the propane tank valve to the fully closed position and disconnect the tank. Make sure to **ALWAYS** cover the generator inlet and tank outlet with protective plastic caps.

- LPG/Propane is highly flammable and explosive.
- Flammable gas under pressure can cause a fire or explosion if ignited.
- LPG/Propane can settle in low places because it is heavier than air.
- LPG/Propane has a distinctive odor added to help detect potential leaks.
- **ALWAYS** keep a LPG/Propane tank in an upright position.
- When exchanging LPG/propane tanks, be sure the tank valve is the same type.
- In case of a LPG/propane fire, **DO NOT** attempt to extinguish unless the fuel supply can be shut off safely.
- LPG/propane will burn the skin. Prevent skin contact at all times.
- Keep the propane tank away from the generator exhaust.
- Large (500–1000 gallon) LPG/propane tanks will require a certified plumber to install the fuel line to the generator and the loose regulator is not used (the regulator that is attached to the fuel tank). The pressure as measured at the regulator mounted to the generator must be 7” to 14” of water column. A certified plumber must ensure that the pressure is correct or install a step down regulator if needed.

⚠ WARNING

Fire and explosion hazard. If there is a strong smell of propane while operating the generator, fully close the LPG/propane tank valve immediately. Once the propane is off, use soapy water to check for leaks on the hose and connections on the tank valve and the generator. **DO NOT** smoke or light a cigarette or check for leaks using any open flame source such as a match or lighter. If a leak is found, contact a qualified technician to inspect and repair the LPG/propane system before using the generator.

When starting the generator:

- Make sure that the fuel cap, air filter, spark plug, fuel lines, and exhaust system are properly in place.
- If you spill any gasoline on the tank, allow it to fully evaporate before operating.
- Make sure the generator and LPG/propane tank are on a flat surface before operating.
- If there is a propane odor **DO NOT** start the unit because there may be a potential leak. **NEVER** place a LPG/propane tank near the engine exhaust.

When transporting or servicing the generator:

- Make sure the LPG/propane tank and LPG/propane hose are not attached to the generator.
- Disconnect the spark boot to prevent accidental starting.

When storing the generator:

- Store away from sparks, open flames, pilot lights, heat, and other sources of ignition.
- **DO NOT** store gas or a LPG/propane tank near furnaces, water heaters, or any other appliances that produce heat or have automatic ignitions.

SAFETY

SAFETY LABELS

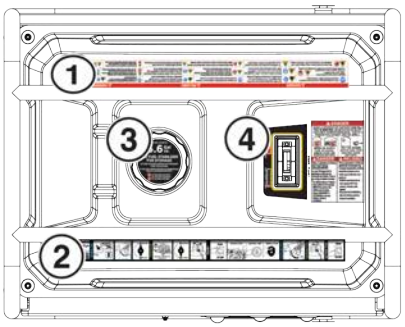

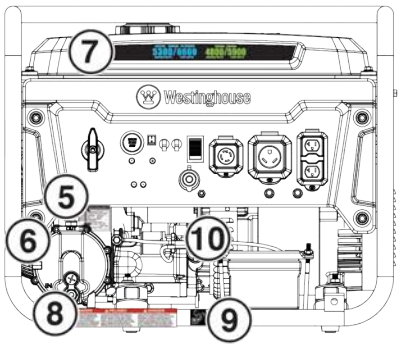

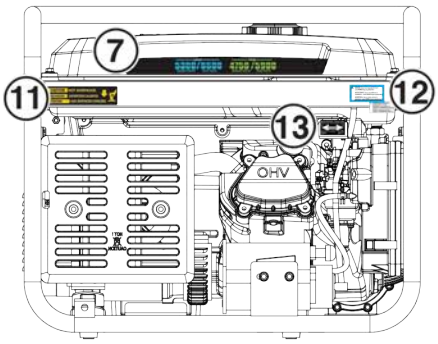

1

DANGER

Failure to follow warnings, instructions and operator's manual will result in death or serious injury.

Hot muffler and exhaust gases can cause fires. Keep at least 5ft. (1.5 m) clearance from any combustibles or structures, including overhead.

Generator could cause electrical shock.
- ONLY use in dry conditions
- DO NOT operate in rain or wet weather
- A transfer switch must be used when connecting to a building.

Exhaust contains poisonous carbon monoxide gas that can cause unconsciousness or **DEATH**. Install Carbon Monoxide alarms inside home.

Never fuel unit with engine running. Always fuel in well ventilated area. Always allow unit to cool before fueling.

For electrical equipment only. Failure to properly ground generator can result in electrocution.

PELIGRO

No obedecer las advertencias e instrucciones y el manual del operador provocará lesiones graves o la muerte.

Los gases calientes del escape podrían causar un incendio. Deje un espacio libre de al menos 1.5 m de cualquier combustible o estructura, incluyendo por encima.

El generador podría causar una descarga eléctrica.
- No opere en interiores para evitar condiciones de humedad.
- No opere en la lluvia ni en clima húmedo.
- No conectar al sistema eléctrico de una casa.

Los gases de escape contienen monóxido de carbono venenoso que puede causar pérdida del conocimiento o la **MUERTE**. Instale alarmas de monóxido de carbono dentro de la casa.

Nunca cargue la unidad con el motor en marcha. Cargue siempre en un área bien ventilada. Siempre deje que la unidad se enfríe antes de cargar combustible.

Solo para equipos eléctricos. No conectar a tierra correctamente el generador puede provocar una electrocución.

DANGER

Le non-respect des avertissements, des instructions et du manuel de l'utilisateur entraînera la mort ou des blessures graves.

Les gaz d'échappement chauds peuvent provoquer des incendies. Gardez un dégagement d'au moins 1.5 m de tout combustible ou structure, y compris les hauts généraux.

Le générateur pourrait provoquer un choc électrique.
- Ne courez pas à l'intérieur pour éviter les conditions humides.
- Ne courez pas sous la pluie ou par temps humide.
- Ne vous connectez pas au système électrique d'une maison.

Les gaz d'échappement contiennent du monoxyde de carbone gazeux toxique qui peut provoquer une perte de conscience ou la **MORT**. Installez des avertisseurs de monoxyde de carbone à l'intérieur de la maison.

Ne faites jamais de carburant avec le moteur en marche. Faites toujours le plein dans un endroit bien ventilé. Laissez toujours l'appareil refroidir avant de faire le plein.

Pour les équipements électriques uniquement. Une mauvaise mise à la terre du générateur peut entraîner une électrocution.

2

3

4

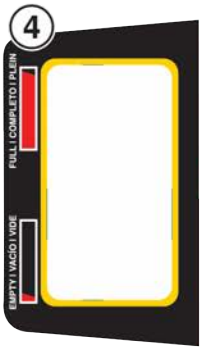

DANGER

USING A GENERATOR INDOORS **CAN KILL YOU IN MINUTES**. GENERATOR EXHAUST CONTAINS CARBON MONOXIDE. THIS IS A POISON YOU CANNOT SEE OR SMELL.

NEVER USE INSIDE A HOME OR GARAGE, **EVEN IF** DOORS AND WINDOWS ARE OPEN.

ONLY USE **OUTSIDE** AND FAR AWAY FROM WINDOWS, DOORS, AND VENTS.

DANGER

Utiliser un générateur à l'intérieur PEUT VOUS TUER EN QUELQUES MINUTES. Les gaz d'échappement du générateur contiennent du monoxyde de carbone. C'est un gaz toxique invisible et inodore
- NE JAMAIS utiliser à l'intérieur d'une maison ou d'un garage, MÊME SI les portes et les fenêtres sont ouvertes.
- Utiliser UNIQUEMENT à l'EXTÉRIEUR et loin des fenêtres, portes et ventilations.

PELIGRO

Si usa un generador en interiores MORIRÁ EN POCOS MINUTOS. El escape del generador contiene monóxido de carbono. Es un veneno que no tiene olor ni se puede ver.
- NUNCA lo use dentro de una casa o garaje, AUN si las puertas y ventanas están abiertas.
- Solo úselo EN EXTERIORES y lejos de ventanas, puertas y ductos de ventilación.

5

Westinghouse — **EMISSION CONTROL INFORMATION**
Westinghouse Out door Power Equipm ent, LLC

THIS ENGINE IS CERTIFIED TO OPERATE ON UNLEADED GASOLINE
THIS ENGINE MEETS 2021 MODEL YEAR U.S. EPA AND CALIFORNIA EXH AND EVAP EMISSION REGULATIONS FOR SORE.
EXH ENGINE FAMILY:*CDPS.2241DJ EVAP FAMILY: CM 2241
EPA EVAP FAMILY: *CDPPNHEQ001 EVAP ECS: CM
DISPLACEMENT: ***CC EXH ECS: EM
REFER TO OWNER'S MANUAL FOR MAINTENANCE SPECIFICATIONS AND ADJUSTMENTS

THE AIR INDEX OF THIS ENGINE IS 3

0	2	4	6	8	10

MOST CLEAN — LEAST CLEAN

EMISSIONS COMPLIANCE PERIOD: 125HOURS

J F M A M J J A S O N D

6

CAUTION

TURN OFF PROPANE SOURCE:
- **When generator is off**
- **When operating generator on gas**

PRECAUCIÓN
APAGUE LA FUENTE DE PROPANO:
- **Cuando el generador está apagado**
- **Cuando se opera generador en gas**

MISE EN GARDE
ÉTEIGNEZ LA SOURCE DE PROPANE:
- **Lorsque le générateur est éteint**
- **Lors de l'utilisation de la génératrice au gaz**

7

8

DANGER

Read owners manual before operating generator on LPG/propane. LPG/Propane is highly flammable. Leaking LP-gas can cause a fire or explosion if ignited. If you smell propane while you are operating unit, immediately shut off propane valve. Keep propane tank away from exhaust.

PELIGRO

Lea el manual del propietario antes de operar el generador con GLP / propano. GLP / propano es altamente inflamable. La fuga de gas LP puede causar un incendio o una explosión si se enciende. Si huele a propano mientras está operando la unidad, apague inmediatamente la válvula de propano. Mantenga el tanque de propano lejos del escape.

DANGER

Lisez le manuel du propriétaire antes de operer el générateur sur le propane. Le propane est hautement inflammable. Une fuite de gaz peut provoquer un incendie ou une explosion si elle s'allume. Si vous sentez le propane pendant que vous utilisez l'unité, fermez immédiatement la vanne de propane. Gardez le réservoir de propane à l'écart de l'échappement.

9

10

11

CAUTION HOT SURFACES
PRECAUCIÓN SUPERFICIES CALIENTES
ATTENTION AUX SURFACES CHAUDES

12

WARNING: Cancer and reproductive harm - www.P65Warnings.ca.gov/product

AVERTISSEMENT: Cancer et problèmes de reproduction - www.P65Warnings.ca.gov/product

ADVERTENCIA: Cáncer y daños al sistema reproductor - www.P65Warnings.ca.gov/product

13

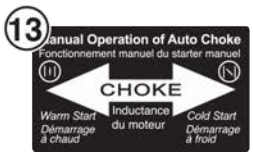

SAFETY LABELS

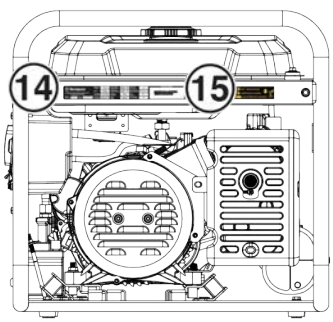

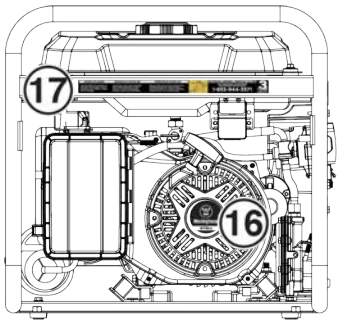

14

15

16

17

SAFETY

CO SENSOR

The CO Sensor monitors for the accumulation of poisonous carbon monoxide gas around the generator when the engine is running. If increasing levels of CO gas are detected, the CO Sensor automatically shuts down the engine.

The CO Sensor will also detect the accumulation of carbon monoxide from other fuel burning sources used in the area of operation. For example, if the exhaust of fuel burning tools is pointed at a CO Sensor-equipped generator, a shut-off may be initiated due to rising CO levels. This is not an error. Hazardous carbon monoxide has been detected. Move and redirect any additional fuel burning sources to dissipate carbon monoxide away from personnel and occupied buildings.

Note: Remote start-equipped generators must be restarted with the START/STOP button on the control panel after an automatic shut-down occurs.

Generators are intended to be used outdoors, far from occupied buildings and the exhaust pointed away from personnel and buildings. If misused and operated in a location that results in the accumulation of CO, like in a partially enclosed area, the CO Sensor shuts off the engine, notifies the user with a RED indicator light, and directs the user to read the Action Label for steps to take. The CO Sensor **DOES NOT** replace carbon monoxide alarms. Install battery-powered carbon monoxide alarm(s) in your home.

⚠ WARNING

Automatic shutoff accompanied with a flashing RED light in the CO Sensor portion of the control panel is an indication that the generator was improperly located. If you start to feel sick, dizzy, weak, or carbon monoxide detectors in your home indicate an alarm, get to fresh air immediately. Call emergency services. You may have carbon monoxide poisoning.

ACTION LABEL

CONTROL PANEL CO AUTO-SHUTOFF

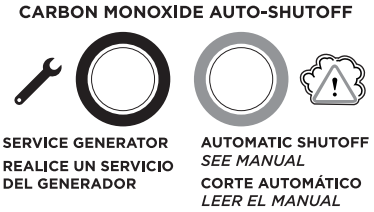

CO SENSOR INDICATOR LIGHTS

Color	Description
RED	Carbon monoxide accumulated around the generator. After shut-off, the RED indicator light in the CO Sensor area of the control panel will flash to provide notification that the generator was shut-off due to an accumulating CO hazard. The RED light will flash for at least five minutes after a CO shut-off. Move the generator to an open, outdoor area far away from occupied spaces with exhaust pointed away. Once relocated to a safe area, the generator can be restarted. Introduce fresh air and ventilate the area where the generator had shut down.
YELLOW	A CO sensor system fault occurred. When a system fault occurs, the generator is automatically shut down and the YELLOW indicator light in the CO auto-shutoff area of the control panel will flash to provide notification that the a fault has occurred. The YELLOW light will flash for at least five minutes after a fault. The generator can be re-started, but may continue to shutoff. A CO sensor fault can only be diagnosed and repaired by an authorized Westinghouse service center.

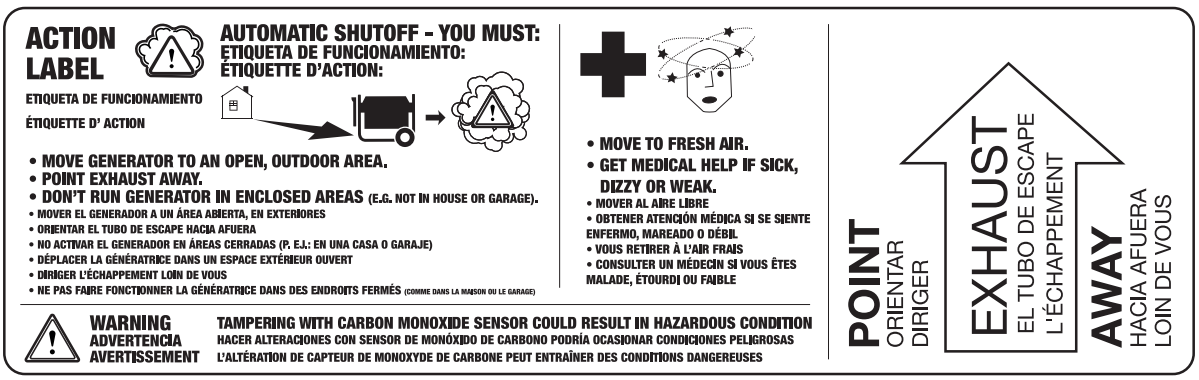

COMPONENTS

CONTROL PANEL COMPONENTS

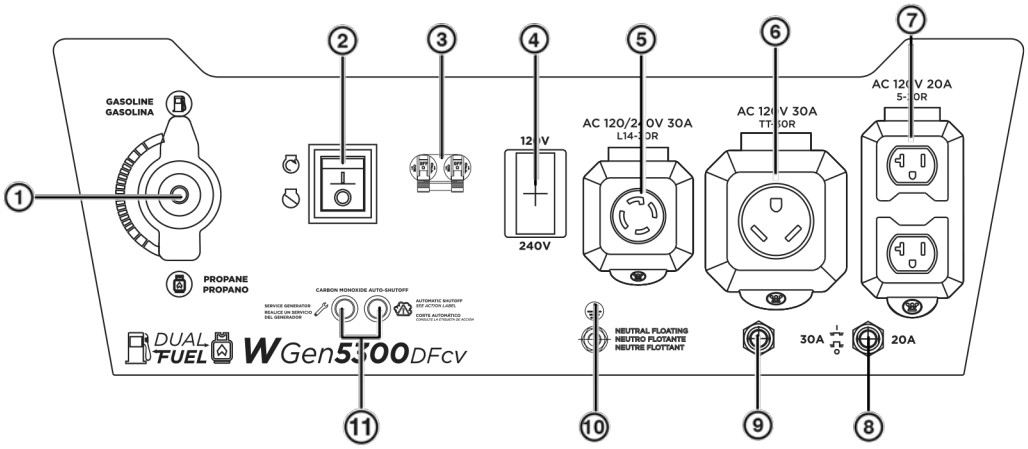

1. **Fuel Selector Switch:** Used to select gas or propane operation.
2. **Run/Stop Switch:** Push to Run position to start or Stop position to shut the generator off.
3. **Main Circuit Breaker:** The main circuit breaker controls total output of all outlets to protect the generator from overload or short circuit.
4. **Voltage Selector Switch:** Select 120V or 240V. **Turn generator OFF before switching voltage.** When operating at 240V only the L14-30R receptacle is operational.
5. **120/240 Volt AC, 30 Amp NEMA L14-30R Twist-Lock Receptacle:** Receptacle can supply a maximum of 30 Amps
6. **120 Volt AC, 30 Amp NEMA TT-30R Receptacle:** Receptacle can supply a maximum of 30 Amps.
7. **120 Volt AC, 20 Amp Duplex NEMA 5-20R Receptacles:** Receptacles can supply a maximum of 20 Amps.
8. **20 Amp AC Circuit Breaker:** Circuit breaker limits the current that can be delivered through the NEMA 5-20R receptacles to 20 Amps.
9. **30 Amp AC Circuit Breaker:** Circuit breaker limits the current that can be delivered through the TT-30R receptacle to 30 Amps.
10. **Ground Terminal:** The ground terminal is used to externally ground the generator.
11. **CO Sensor indicator lights:** The CO Sensor monitors for the accumulation of poisonous carbon monoxide gas. If increasing levels of CO gas are detected, the CO Sensor automatically shuts down the engine

COMPONENTS

GENERATOR COMPONENTS

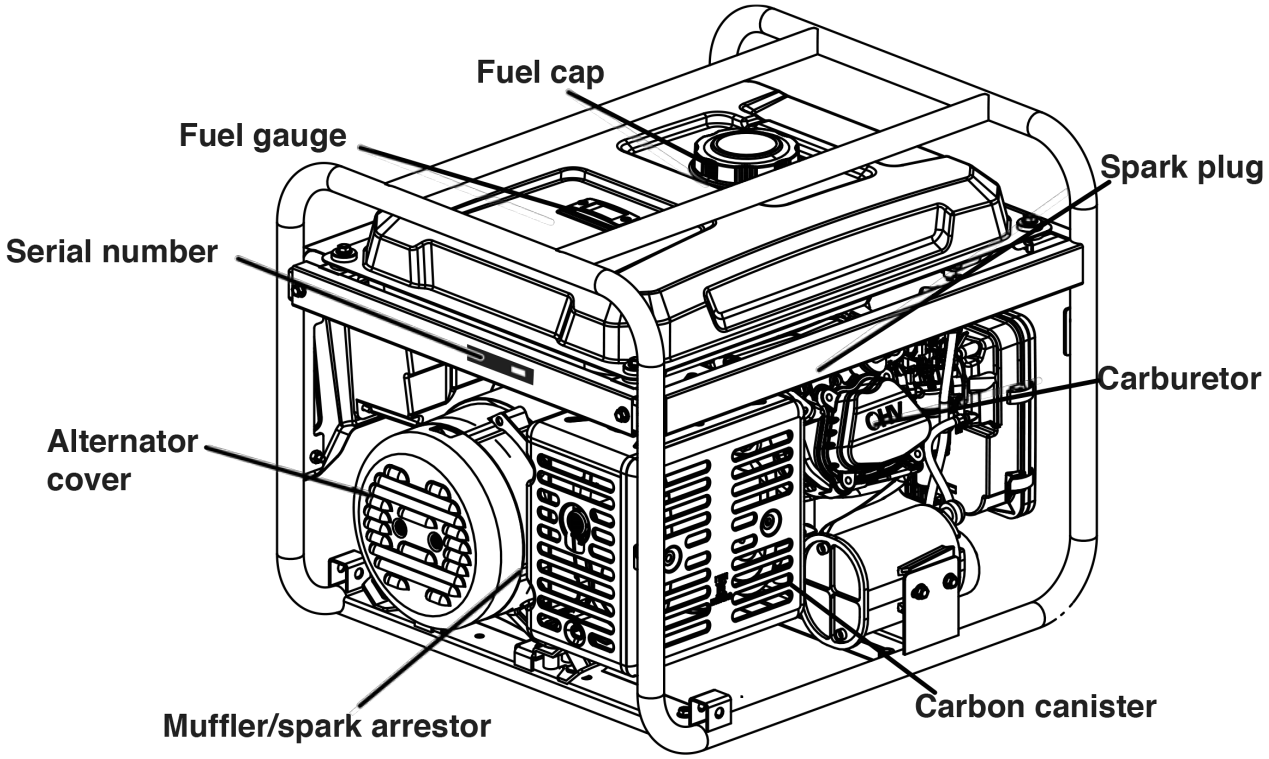

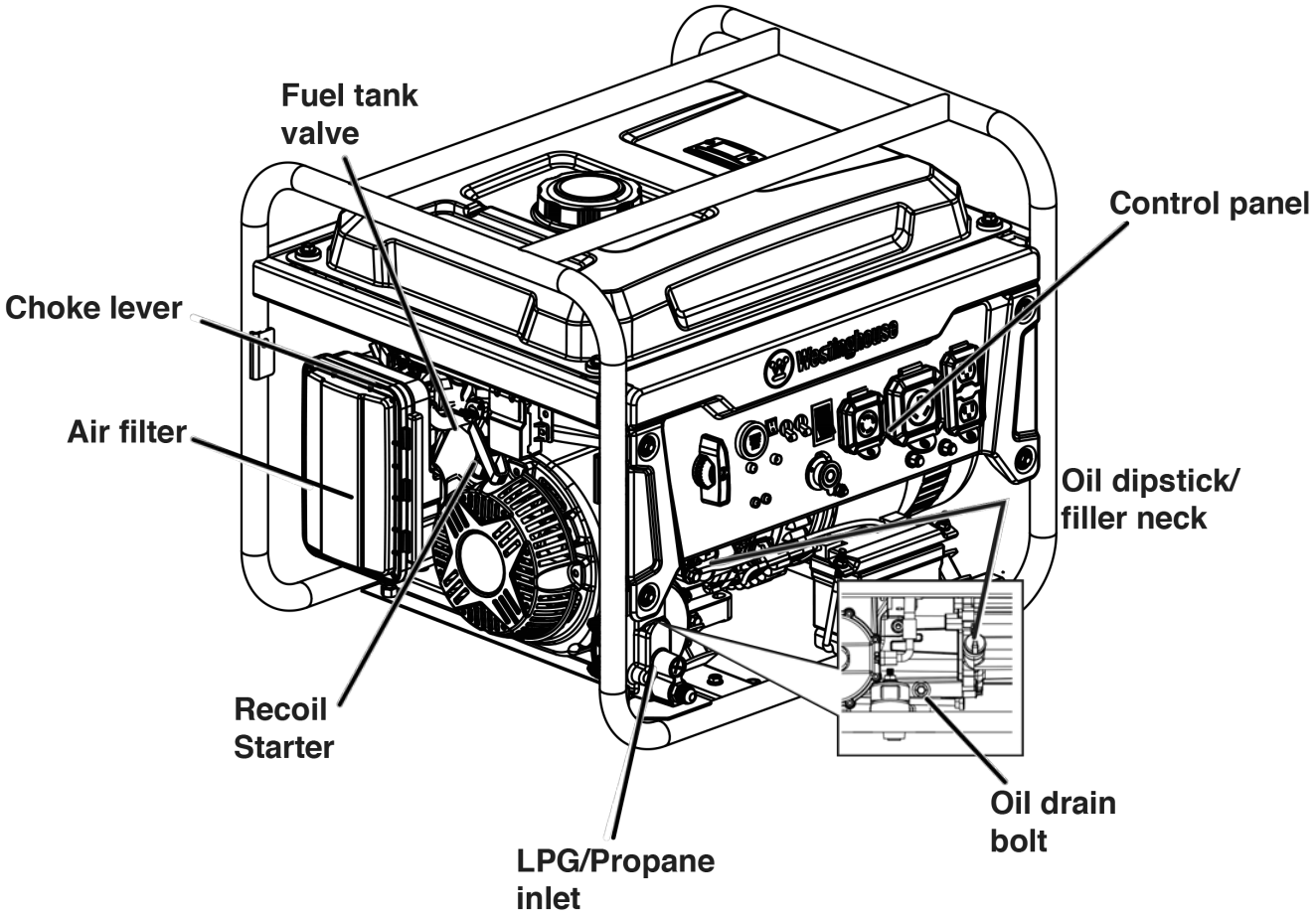

ASSEMBLY

CARTON CONTENTS

⚠ CAUTION

Weight hazard. **ALWAYS** have assistance when lifting the generator.

1. Carefully open the carton.

2. Remove and save the carton contents.

3. Remove and discard the packing tray.

4. Unfold the top of the plastic bag enclosing the generator.

5. Carefully cut the vertical corners of the carton to access the generator.

6. Recycle or dispose of the packaging materials properly.

CARTON CONTENTS

- User manual
- Quick Start Guide
- LPG/propane hose with regulator
- Bottle of SAE 10W-30 oil
- Clé
- Oil Funnel
- Wrench
- Wheel and mounting foot components:

Item	Quantity
• Mounting foot	2
• Flange bolt, M8	4
• Wheel	2
• Axle pin	2
• Washer	2
• Cotter pin	2

If any parts are missing, contact our service team at service@wpowereq.com or call 1-855-944-3571.

INSTALL FEET AND WHEELS

NOTICE

Assembling the generator will require lifting the unit on one side. Install the mounting feet and wheel before adding fuel or oil.

1. Place generator on a flat surface.

2. Tip the generator on a piece of cardboard or other soft material to protect the frame paint and prevent the generator from sliding.

3. With the included wrench, install the mounting feet to the frame as shown.

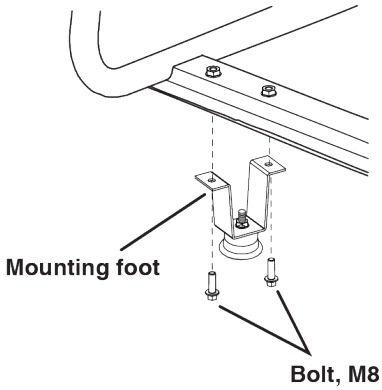

4. Install the wheels as shown.

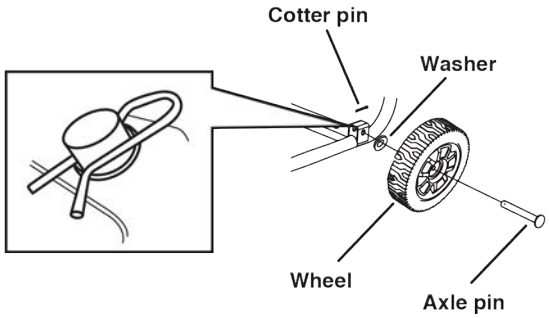

Note: The wheels are only intended for hand transport. The wheels are not suitable for towing the generator either on or off-road.

ASSEMBLY

INITIAL OIL FILL

NOTICE

THIS GENERATOR HAS BEEN SHIPPED WITHOUT OIL. **DO NOT** attempt to crank or start engine before it has been properly serviced with recommended oil. Failure to add engine oil before starting will result in serious engine damage.

NOTICE

Use of 2-stroke/cycle oil or other unapproved oil types can cause severe engine damage that is not covered under warranty.

The included, recommended oil type for typical use is 10W-30 engine oil. If running the generator in extreme temperatures, refer to the following chart.

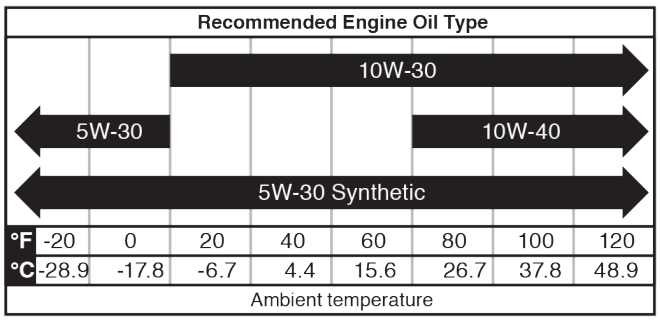

1. On a level surface, remove the oil dipstick.

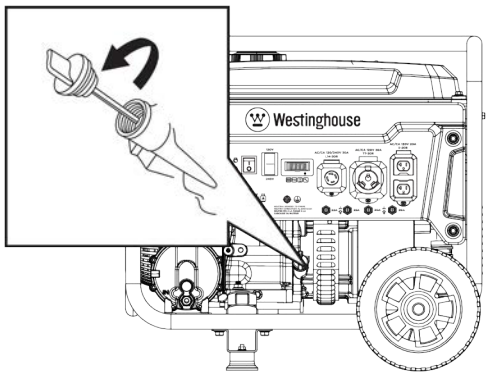

2. Using the supplied funnel and oil, add oil into oil filler neck.

Note: As residual oil from the factory may remain in the engine, add the oil incrementally near the end of the bottle to prevent overfilling the engine. See Engine Oil Level Check in the Maintenance section.

3. Wipe the oil dipstick clean. Replace the oil dipstick and hand-tighten.

FUEL

⚠ WARNING

Fire and explosion hazard. **NEVER** use a gasoline container, gasoline tank, propane connector hose, propane tanks, or any other fuel item that is broken, cut, torn or damaged.

⚠ DANGER

Fire and explosion hazard. **DO NOT** overfill fuel tank. Fill only to the red fill ring located in the in-tank fuel screen filter. Overfilling may cause fuel to spill onto engine causing a fire or explosion hazard.

⚠ DANGER

Fire and explosion hazard. **NEVER** refuel the generator while the engine is running. **ALWAYS** turn the engine off and allow the generator to cool for two minutes before refueling.

NOTICE

E85 E15

DO NOT use E15 or E85 fuel in this product. Engine or equipment damage caused by stale fuel or the use of unapproved fuels (such as E15 or E85 ethanol blends) is not covered by warranty. Only use unleaded gasoline containing up to 10% ethanol.

FUEL REQUIREMENTS

- CLEAN, FRESH, unleaded gasoline, 87–93 octane.
- Up to 10% ethanol (gasohol) is acceptable (where available; non-ethanol fuel is recommended).
- **DO NOT** use E85 or E15.
- **DO NOT** use a gas oil mix.
- **DO NOT** modify the engine to run on alternate fuels.
- **DO NOT** fuel indoors.
- **DO NOT** create a spark or flame while fueling.

USING FUEL STABILIZER

Adding a fuel stabilizer (not included) extends the usable life of fuel and helps prevent deposits from forming that can clog the fuel system. Follow the manufacturer's instructions for use.

ALWAYS mix the correct amount of fuel stabilizer to gasoline in an approved gasoline container before fueling the generator. Run the generator for five minutes to allow the stabilizer to treat the entire fuel system.

FILLING THE FUEL TANK

1. Turn the generator OFF and allow to cool for a minimum of two minutes before fueling.
2. Place the generator on level ground in a well-ventilated area.
3. Clean area around fuel cap and remove the cap slowly.

NOTICE

Only fill the tank from an approved gasoline container. Make sure the gasoline container is internally clean and in good condition to prevent fuel system contamination.

4. Slowly add the recommended fuel. **DO NOT** overfill. Fill only to the red maximum fill ring on the fuel screen filter visible in the filler neck.

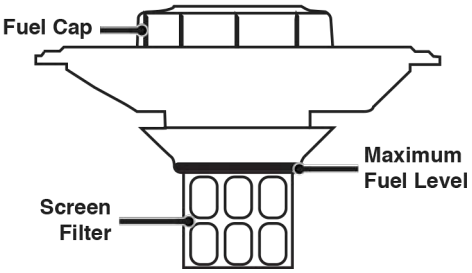

5. Install the fuel cap.

NOTICE

Fuel can damage paint and plastic. Use caution when filling the fuel tank. Damage caused by spilled fuel is not covered under warranty.

NOTICE

Clean the fuel screen filter of debris before and after each fueling. Remove the fuel screen filter by slightly compressing it while removing it from the fuel tank.

CONNECT AN LPG/PROPANE TANK

NOTICE

- The LPG/propane tank can be of any capacity but the tank must conform to the standard as listed in Fuel Safety section.
- Propane tanks that use liquid withdrawal system can not be used on these models.
- Verify the re-qualification date on the tank has not expired.
- **DO NOT** use included LPG/propane hose for any other appliances.

NOTICE

- All new tanks must be purged of air and moisture prior to filling. Used tanks that have not been plugged or kept closed must also be purged. The purging process should be done by a propane supplier (Tanks from an exchange supplier should have been purged and filled properly).
- **ALWAYS** position the tank so the connection between the valve and the gas inlet will not cause sharp bends or kinks in the hose.

⚠ WARNING

Explosion hazard. **DO NOT** start generator if you smell propane. **ALWAYS** fully close the propane tank valve and disconnect the LPG/propane hose from the generator when not in use.

1. Turn the generator OFF and place on a flat surface in a well ventilated area.
2. Verify that the propane tank valve is in the fully closed position.
3. Remove the cover on the generator propane inlet valve.
4. Use your fingers to hand thread the LPG/propane hose (included) to the propane inlet on the generator.

IMPORTANT: DO NOT use thread seal tape or any other type of sealant to seal the LPG/propane hose connection.

5. Tighten the LPG/propane hose connector to the generator with a 19 mm or adjustable wrench. **DO NOT** over-tighten.

   Torque: 5-10 lb-ft.

ASSEMBLY

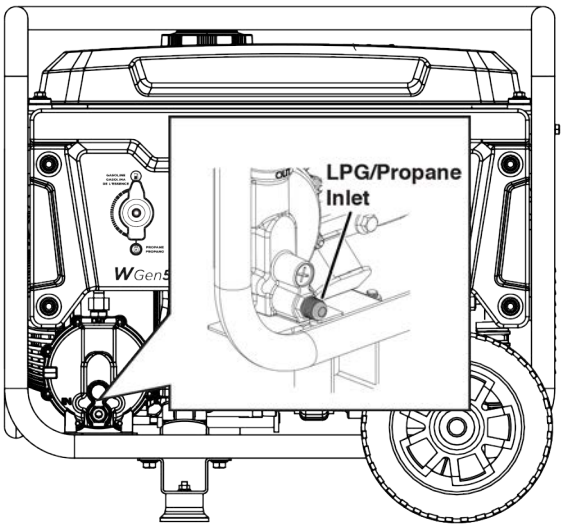

1. Remove the safety plug or cap from the propane tank valve and attach the other end of the hose to the LPG/ propane connector on the tank. Hand-tighten.

2. Turn the propane tank valve to the fully open position. Check all connections for leaks by wetting the fittings with a solution of soap and water. Bubbles which appear or bubbles which grow indicate that a leak exists. If a leak exists at a fitting, turn the propane tank valve to the fully closed position and tighten the fitting. Open the propane tank valve and recheck the fitting with the soap and water solution. If the leak continues or if the leak is not at a fitting then **DO NOT** use the generator and contact customer service.

IMPORTANT: Keep the propane tank valve in the fully closed position unless in use.

OPERATION

GENERATOR LOCATION

Read and understand all safety information before starting the generator.

⚠ DANGER

Using a generator indoors CAN KILL YOU IN MINUTES. Generator exhaust contains carbon monoxide. This is a poison you cannot see or smell.

NEVER use inside a home or garage, EVEN IF doors and windows are open.

Only use OUTSIDE and far away from windows, doors, and vents.

NEVER operate the generator inside any building, including garages, basements, crawlspaces, sheds, enclosure, or compartment, including the generator compartment of a recreational vehicle.

⚠ DANGER

Electrocution hazard. **NEVER** use the generator in a location that is wet or damp. **NEVER** expose the generator to rain, snow, water spray, or standing water while in use. Protect the generator from all hazardous weather conditions. Moisture or ice can cause a short circuit or other malfunction in the electrical circuit. Using a generator or electrical appliance in wet conditions, such as rain or snow, or near a pool or sprinkler system, or when your hands are wet, could result in electrocution

⚠ WARNING

Fire hazard. Only operate the generator on a solid, level surface. Operating the generator on a surface with loose material such as sand or grass clippings can cause debris to be ingested by the generator that could block cooling vents or the air intake system. Allow the generator to cool for 30 minutes before transport or storage.

The generator should be on a flat, level surface at all times (Even while not in operation). The generator must have at least 5 ft. (1.5 m) of clearance from all combustible material.

DO NOT operate the generator in the back of a SUV, camper, trailer, truck bed (regular, flat, or otherwise), under stairs, next to walls or buildings, or in any other location that will not allow for adequate cooling of the generator and/or the muffler. **DO NOT** contain generators during operation.

⚠ DANGER

Asphyxiation hazard. Place the generator in a well-ventilated area. **DO NOT** place the generator near vents or intakes where exhaust fumes could be drawn into occupied or confined spaces. Carefully consider wind and air currents when positioning the generator.

GROUNDING

⚠ WARNING

Shock hazard. Failure to properly ground the generator can result in electric shock.

NOTICE

Only use grounded 3-prong extension cords, tools, and appliances, or double-insulated tools and appliances.

The generator neutral is floating. The generator ground terminal is connected to the frame of the generator, the metal non-current-carrying parts of the generator, and the ground terminals of each receptacle. The generator (stator winding) is isolated from the frame and from the AC receptacle ground pin. Electrical devices that require a grounded receptacle pin connection may not function properly.

If this generator will be used only with cord and plug equipment connected to the receptacles mounted on the generator, National Electric Code does not require that the unit be grounded. However, other methods of using the generator may require grounding to reduce the risk of shock or electrocution.

Before using the ground terminal, consult a qualified electrician, electrical inspector, or local agency having jurisdiction for local codes or ordinances that apply to the intended use of the generator.

HIGH ALTITUDE OPERATION

Engine power is reduced the higher you operate above sea level. Output will be reduced approximately 3.5% for every 1000 feet of increased altitude from sea level.

High altitude adjustment is required for operation at altitudes over 2,000 ft. (762 m). Operation without this adjustment will cause decreased performance, increased fuel consumption, and increased emissions.

NOTICE

DO NOT operate the generator at altitudes below 2,000 ft. (762 m) with the high altitude kit installed. Engine damage may occur.

Note: You must purchase both the Dual Fuel Regulator and Carburetor Kit for proper high altitude operation.

OPERATION

High Altitude Carburetor Kit: Part# 518965
High altitude DF regulator: Part# 518516

VOLTAGE SELECTOR SWITCH

The 120V/240V selector switch, which gives the user the ability to double the amperage in the generator for more demanding applications. The voltage selector switches the dual 120V AC windings of the generator to produce 120V or 240V. If a 240V appliance is connected to the 4-prong L14-30R receptacle, the switch must be in the “240V” position. The 120V only outlets will not output power when the Voltage Selector is in the 240V position.

⚠ WARNING

Only change the Voltage Selector Switch with the generator OFF. **DO NOT** switch the voltage while the generator is running or powering appliances.

FUEL SELECTOR SWITCH

Position the fuel selector switch on the front control panel to the desired fuel choice.

Turn the fuel selector switch fully upward for gasoline operation.

Turn the fuel selector switch fully downward for propane operation.

BREAK-IN PERIOD

For proper break-in, **DO NOT** exceed 50% of the rated running watts (2650 watts) during the first five hours of operation.

Vary the load occasionally to allow stator windings to heat and cool and help seat the piston rings.

BEFORE STARTING THE GENERATOR

Verify that:

- The generator is placed in a safe, appropriate location.
- The generator is on a dry, flat, and level surface.
- The engine is filled with oil.
- All loads are disconnected.

⚠ DANGER

Fire and explosion hazard. **DO NOT** move or tip the generator during operation.

STARTING THE ENGINE: GASOLINE

1. Verify that fuel is in the gas tank.

2. Turn the fuel selector switch on the control panel to gasoline operation.

3. Turn the fuel tank valve to the ON position.

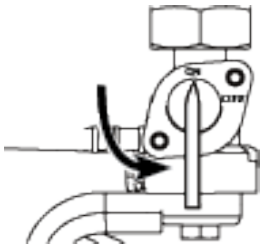

Note: If cold starting, move the choke lever to the ON position.

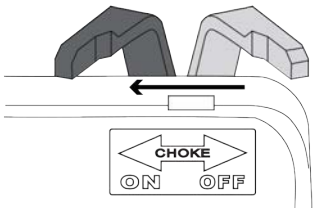

4. Push the Run/Stop switch to the Run position.

5. Firmly grasp and pull the recoil handle slowly until you feel increased resistance, then pull rapidly.

6. After starting, allow the engine to run for several seconds then move the Choke lever to the fully OFF position.

STARTING THE ENGINE: PROPANE

⚠ DANGER

Fire and explosion hazard. **ALWAYS** turn the propane tank valve to the fully closed position if not running the generator on propane.

1. Make sure the LPG/propane hose is correctly connected to the generator and propane tank.

2. Turn the fuel selector switch to propane operation.

3. Fully open the valve on the propane tank.

Note: If cold starting, move the choke lever to the ON position.

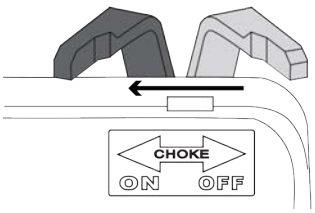

4. Push the Run/Stop switch to the Run position.

5. Firmly grasp and pull the recoil handle slowly until you feel increased resistance, then pull rapidly.

6. After starting, allow the engine to run for several seconds then move the Choke lever to the fully OFF position.

SWITCHING FUEL SOURCES

⚠ DANGER

Fire and explosion hazard. **DO NOT** add gasoline to the fuel tank or connect the LPG/propane hose to the generator while the generator is in operation.

The fuel source can be switched while the engine is running if a propane tank is connected to the generator BEFORE operation.

GASOLINE TO PROPANE

IMPORTANT: Load capacity is reduced when running on propane. Make sure the generator can supply enough (running) and surge (starting) watts for the items you are powering before switching to propane.

1. Fully open the valve on the propane tank.

2. Turn the fuel selector switch to propane operation.

3. Turn the fuel tank valve to the OFF position.

PROPANE TO GASOLINE

1. Turn the fuel tank valve to the ON position.

2. Turn the fuel selector switch to gasoline operation.

3. Turn the propane tank valve to the fully closed position.

Note: When switching to propane operation the engine may run rough for a few seconds while it purges gasoline in the carburetor.

If the engine stops when switching fuel sources, disconnect all loads then restart the unit on the fuel source of choice.

STOPPING THE ENGINE

1. Turn off and unplug all connected electrical loads.

IMPORTANT: NEVER start or stop the generator with electrical devices connected.

2. Let the generator run with no load for several minutes to stabilize internal temperatures of the engine.

3. Push the Run/Stop switch to the Stop position.

Note: Alternately, if the generator is used infrequently, turn the fuel tank valve to the OFF position to limit the residual fuel remaining in the carburetor float bowl. The engine will stop when fuel in the carburetor and fuel line is exhausted.

4. If operating on propane, turn the propane tank valve to the fully closed position.

FREQUENCY OF USE

If the generator will be used on an infrequent or intermittent basis (more than one month before next use), refer to the Storage section of this manual for information regarding fuel deterioration.

AC CIRCUIT BREAKERS

The circuit breakers will automatically switch OFF if there is a short circuit or a significant overload of the generator at each receptacle.

If an AC circuit breaker switches OFF automatically, check that the appliance is working correctly and it does not exceed the rated load capacity of the circuit before resetting the AC circuit breaker ON.

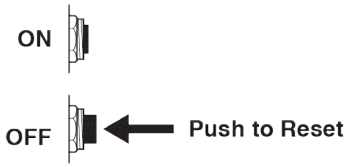

GENERATOR CAPACITY

NOTICE

DO NOT overload the generator's capacity. Exceeding the generator's wattage/amperage capacity can damage the generator and/or electrical devices connected to it.

Make sure the generator can supply enough continuous (running) and surge (starting) watts for the items you will power at the same time.

The total power requirements (Volts x Amps = Watts) of all appliances connected must be considered. Appliance and power tool manufacturers usually list rating information near the model or serial number.

To determine power requirements:

OPERATION

1. Select the items you will power at the same time.
2. Total the continuous (running) watts of these items. This is the amount of power the generator must produce to keep the items running. See the wattage reference chart.
3. Estimate how many surge (starting) watts you will need. Surge wattage is the short burst of power needed to start electric motor-driven tools or appliances such as a circular saw or refrigerator. Because not all motors start at the same time, total surge watts can be estimated by adding only the item(s) with the highest additional surge watts to the total rated watts from step 2.

Example:

Tool or Appliance	Running Watts*	Starting Watts*
RV Air Conditioner (11,000 BTU)	1010	1600
TV (Tube Type)	300	0
RV Refrigerator	180	600
Radio	200	0
Light (75 Watts)	300	0
Coffee Maker	600	0
Total	2590	1600

Total Running Watts	2590
Highest Starting Watts	+ 1600
Total Starting Watts Needed	4190

*Wattages listed are approximate. Verify actual wattage.

POWER MANAGEMENT

To prolong the life of the generator and attached devices, use care when adding electrical loads to the generator. There should be nothing connected to the generator outlets before starting the engine. The correct and safe way to manage generator power is to sequentially add loads as follows:

1. With nothing connected to the generator, start the engine as described in this manual.
2. Plug in and turn on the first load, preferably the largest load you have.
3. Permit the generator output to stabilize (engine runs smoothly and attached device operates properly).
4. Plug in and turn on the next load.
5. Again, permit the generator to stabilize.
6. Repeat steps 4 and 5 for each additional load.

Wattage Reference

Tool or Appliance	Estimated Running Watts*	Estimated Starting Watts*
Incandescent Lights (4 Quantity x 75 Watts)	300	0
TV (Tube Type)	300	0
Sump Pump (1/3 hp)	800	1300
Refrigerator or Freezer	700	2200
Well Pump (1/3 hp)	1000	2000
Furnace (1/2 hp)	800	2350
Radio	200	0
Drill (3/8”, 4 amps)	440	600
Circular Saw (Heavy Duty, 7-1/4”)	1400	2300
Miter Saw (10”)	1800	1800
Table Saw (10”)	2000	2000

*Wattages listed are approximate. Verify actual wattage.

EXTENSION CORDS

⚠ WARNING

Asphyxiation hazard. Extension cords running directly into the home increase the risk of carbon monoxide poisoning through any openings. If an extension cord running directly into your home is used to power indoor items, there is a risk of carbon monoxide poisoning to people inside the home. **ALWAYS** use battery-powered carbon monoxide detector (s) that meet current UL 2034 safety standards when running the generator. Regularly check the detector (s) battery.

⚠ WARNING

Asphyxiation hazard. When operating the generator with extension cords, make sure the generator is located in an open, outdoor area, far away from occupied spaces with exhaust pointed away.

⚠ WARNING

Fire and electrocution hazard. **NEVER** use worn or damaged extension cords. Damaged or overloaded extension cords could overheat, arc, and burn resulting in death or serious injury.

Before connecting an AC appliance or power cord to the generator:

- Use grounded 3-prong extension cords, tools, and appliances, or double-insulated tools and appliances.
- Make sure the tool or appliance is in good working order. Faulty appliances or power cords can create a potential for electric shock.

- Make sure the electrical rating of the tool or appliance does not exceed the rated power of the generator or the receptacle being used.

EXTENSION CORD SIZING

Only use grounded 3-prong extension cords marked for outdoor use that are rated for the electrical load.

Total Amperage	Minimum Gauge, Outdoor Rated	
	Up to 50 FT (15 M)	Up to 100 FT (30 M)
Up to 10A	12	8
Up to 15A	10	8
Up to 20A	10	6
Up to 30A	8	6
Up to 35A	6	6

TRANSPORTING

⚠ CAUTION

Weight hazard. **ALWAYS** have assistance when lifting the generator.

- Allow the generator to cool a minimum of 30 minutes before transporting.
- If operating on propane, turn the propane tank valve to the fully closed position.
- Disconnect the LPG/propane hose from the generator and propane tank.
- Replace all protective covers on the generator control panel.
- Only use the generator's fixed frame to lift the unit or attach any load restraints such as ropes or tie-down straps. **DO NOT** attempt to lift or secure the generator by holding onto any of its other components.
- Keep the unit level during transport to minimize the possibility of fuel leakage or, if possible, drain the fuel or run the engine until the fuel tank is empty before transport.

⚠ CAUTION

Fire hazard. **DO NOT** up-end the generator or place it on its side. Fuel or oil can leak and damage to the generator may occur.

MAINTENANCE

MAINTENANCE

⚠ WARNING
Accidental start-up. Disconnect the spark plug boot from the spark plug when performing maintenance on the generator.

MAINTENANCE SCHEDULE

Regular maintenance will improve performance and extend the service life of the generator. Follow the hourly or calendar intervals, whichever occurs first. More frequent service is required when operating in adverse conditions as noted below.

Before Each Use
Check engine oil
After First 25 Hours or First Month
Change engine oil
After 50 Hours or Every 6 Months
Change engine oil[1] Clean air filter[2]
After 100 Hours or Every 6 Months
Inspect/clean spark arrestor Inspect/clean spark plug Fuel valve maintenance Inspect/adjust valve clearance[3]
After 300 Hours or Every Year
Replace spark plug Replace air filter

[1] Change oil every month when operating under heavy load or in high temperatures.

[2] Clean more often under dirty or dusty conditions. Replace air filter if it cannot be adequately cleaned.

[3] Recommend service to be performed by authorized Westinghouse service dealer.

MAINTENANCE REMINDERS

Maintenance reminder codes will be shown on the Data Display based on unit Lifetime Hours. The maintenance codes will be displayed until the unit is turned off. Refer to the Maintenance section for specific procedures.

Maintenance Code	Required Maintenance
P25	Change engine oil
P50	• Change engine oil • Clean air filter
P100	• Change engine oil • Clean air filter • Fuel valve maintenance • Inspect/adjust valve clearance

MAINTENANCE REPLACEMENT PARTS

Description	Part Number
Air filter	5941
Oil drain plug crush washer	94007
Spark arrestor	6790
Spark plug	97108 (F7TC)

AIR FILTER MAINTENANCE

The air filter must be cleaned after every 50 hours of use or six months (frequency should be increased if the generator is operated in a dusty environment).

1. Place the generator on a level surface and allow the engine to cool for several minutes.
2. Release the clips and remove the air filter cover.

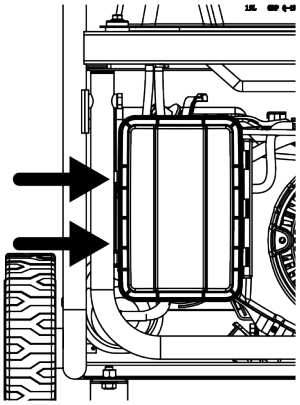

3. Clean the air filter with compressed air. Replace if damaged.
4. Make sure the air filter and rubber cap are correctly installed. Install the air filter cover and secure it in place with the cover clips.

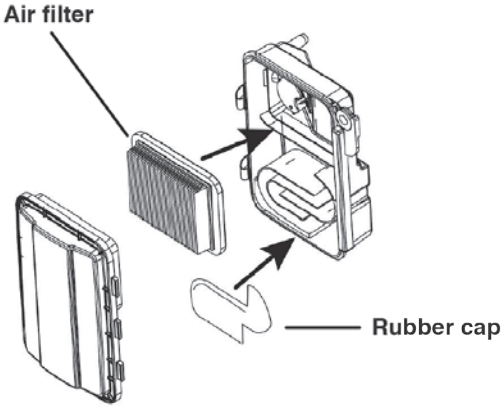

ENGINE OIL LEVEL CHECK

⚠ CAUTION

Avoid skin contact with engine oil. Wear protective clothing and equipment. Wash all exposed skin with soap and water.

NOTICE

ALWAYS use the specified engine oil. Failure to use the specified engine oil can cause accelerated wear and/or shorten the life of the engine.

When using the generator under dirty, dusty conditions or in extremely hot weather, change the oil more frequently.

Ambient air temperature will affect engine oil performance. Change the type of engine oil used based on weather conditions.

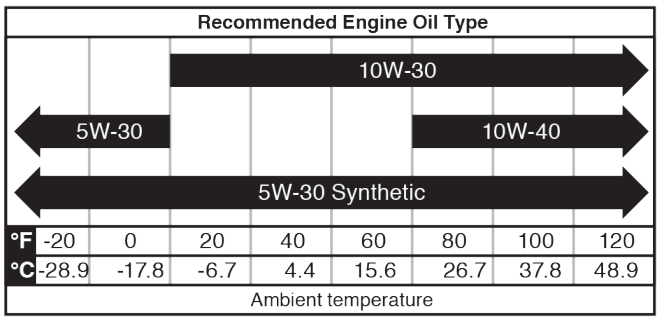

Check the engine oil level before each use or every 8 hours of operation.

1. Place the generator on a level surface and allow the engine to cool for several minutes.
2. With a damp rag, clean around the oil dipstick.
3. Remove the oil dipstick and wipe the dipstick clean.

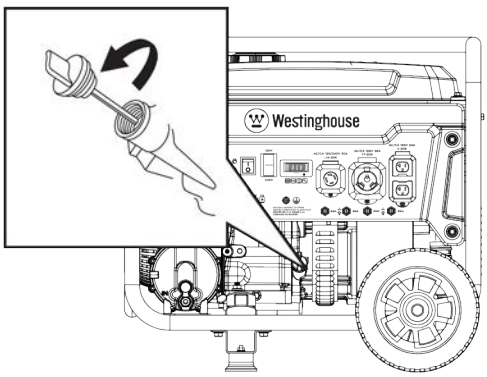

4. Insert the dipstick into the oil filler neck without screwing it in. Remove the dipstick and verify that the oil level is within safe operating range between the low (L) and high (H) marks on the dipstick.

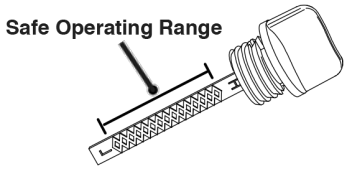

5. If low, add recommended engine oil incrementally and recheck until the level is between the L and H marks on the dipstick. **DO NOT** overfill. If over the H mark on the dipstick, drain the oil to reduce the oil level to the full mark.
6. Replace the oil dipstick and hand-tighten.

ENGINE OIL CHANGE

When using the generator under dirty, dusty conditions or in extremely hot weather, change the oil more frequently. Change the oil while the engine is still warm from operation.

1. Place the generator on a level surface and allow the engine to cool for several minutes.
2. With a damp rag, clean around the oil dipstick. Remove the dipstick and wipe clean.
3. Place an oil pan (or suitable container) under the oil drain bolt.
4. Using a 10mm wrench, remove the oil drain bolt and allow the oil the to drain.

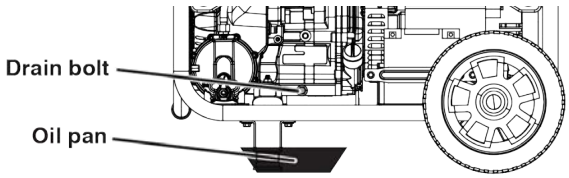

5. Install the oil drain bolt and tighten securely.

Note: A new oil drain plug crush washer is recommended at each oil change.

6. Slowly pour oil into the oil filler neck until oil the level is between the L and H marks on the dipstick. Stop frequently to check the oil level. **DO NOT** overfill.

Maximum oil capacity: 0.74 Quart (0.7 Liter)

7. Install the oil dipstick and hand-tighten.

NOTICE

DO NOT pollute. Follow the guidelines of the EPA or other governmental agencies for proper disposal of hazardous materials. Consult local authorities or reclamation facility.

MAINTENANCE

SPARK PLUG MAINTENANCE

Inspect and clean the spark plug after every 100 hours of use or six months. Replace the spark plug after 300 hours of use or every year.

NOTICE

ALWAYS use the Westinghouse OEM or compatible non-resistor-type spark plug. Use of resistor-type spark plug can result in rough idling, misfire, or may prevent the engine from starting.

1. Place the generator on a level surface and allow the engine to cool.
2. Remove the spark plug boot by firmly pulling the spark boot directly away from the engine.

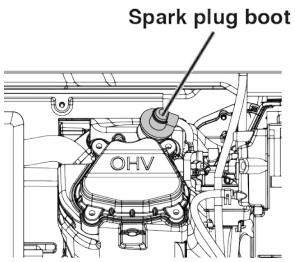

3. Clean the area around the spark plug.
4. Remove the spark plug with the included spark plug socket wrench.

NOTICE

NEVER apply any side load or move the spark plug laterally when removing the spark plug.

5. Inspect the spark plug. Replace if electrodes are pitted, burned, or the insulator is cracked. Only use a recommended replacement plug.
6. Measure the spark plug electrode gap with a wire-type feeler gauge. If necessary, correct the gap by carefully bending the side electrode.

Spark plug gap: 0.024 – 0.032 in. (0.60 – 0.80 mm)

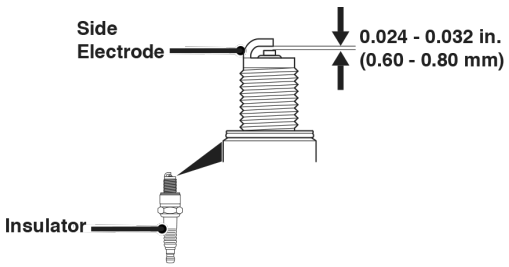

7. Carefully install the spark plug finger tight, then tighten as additional 3/8 to 1/2 turn with the spark plug wrench.
8. Attach the spark plug boot.

FUEL VALVE MAINTENANCE

The fuel valve is equipped with an inline fuel filter. The fuel valve filter does not require servicing if the unit is properly maintained with fresh, clean fuel. If fuel-related troubleshooting is required, perform fuel valve maintenance.

1. Allow the generator to cool completely.
2. Place an appropriate gasoline container under the carburetor drain bolt to catch the drained fuel.
3. Remove the drain bolt on the bottom of the carburetor and allow the fuel tank to drain completely. Install and tighten the drain bolt securely.
4. Remove the fuel line from the fuel valve. Be prepared to capture the remaining fuel from the fuel line.

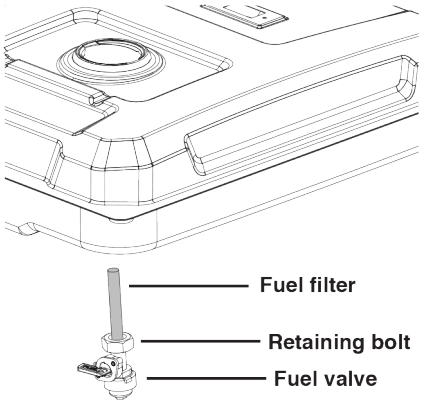

5. Loosen the retaining bolt. Unscrew and remove the fuel valve from the fuel tank. Be prepared to capture any remaining fuel from the fuel tank.
6. Open the fuel valve. Use compressed air to clean the fuel filter and the fuel passage from the fuel line side of the passage.
7. Install and tighten the fuel valve until it has a few threads remaining and is facing outward.
8. Hold it in place and tighten the retaining bolt. **DO NOT** overtighten.
9. Replace the fuel line and secure with the clamp.

SPARK ARRESTOR SERVICE

Allow the muffler to cool completely before servicing the spark arrestor. Check and clean the spark arrestor after every 100 hours of use or six months. Failure to clean the spark arrestor will result in degraded engine performance.

1. Place the generator on a level surface.

2. Slide in screwdriver into side slot and remove screw holding clamp (A) on spark arrestor. Pull out spark arrestor assembly.

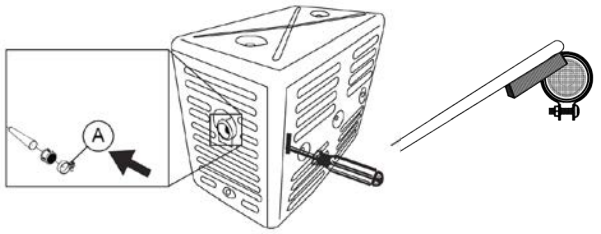

3. Carefully remove the carbon deposits from the spark arrestor screen with a wire brush. The spark arrestor must be free of breaks and tears. Replace the spark arrestor if damaged.

4. Reinstall the spark arrestor.

STORAGE

Proper storage preparation is required for trouble-free operation and generator longevity.

NOTICE

Gasoline stored for as little as 30 days can deteriorate, causing gum, varnish, and corrosive buildup in fuel lines, fuel passages, and the engine. This corrosive buildup restricts the flow of fuel, which can prevent the engine from starting after a prolonged storage period. The use of fuel stabilizer significantly increases the storage life of gasoline. Full-time use of fuel stabilizer is recommended. Follow the manufacturer's instructions for use.

STORAGE TIME	RECOMMENDED PROCEDURE
Less than 1 month	No service required.
2 to 6 months	Fill with fresh gasoline and add gasoline stabilizer. Drain the carburetor float bowl.
6 months or longer	Drain the fuel tank and carburetor float bowl.

SHORT TERM STORAGE

- Allow the generator to cool a minimum of 30 minutes before storage.
- If operating on propane, turn the propane tank valve to the fully closed position and disconnect the LPG/propane hose from the generator and propane tank.
- Replace all protective covers on the generator control panel.
- Wipe the generator with a moist cloth. Clean any debris from the muffler cooling vents.
- Store the generator in a well-ventilated, dry location away from sparks, open flames, pilot lights, heat, and other sources of ignition such as areas with a spark-producing electric motor or where power tools are operated.
- **DO NOT** store the generator, gasoline, or propane tanks near furnaces, water heaters, or any other appliances that produce heat or have automatic ignitions.
- With the engine and exhaust system cool and all surfaces dry, cover the generator to keep out dust. **DO NOT** use a plastic sheet as a dust cover. Non-porous materials trap moisture and promote rust and corrosion.

LONG TERM STORAGE

Even properly stabilized fuel can leave residue and cause corrosion if left long term. If storing the generator for two to six months, drain the float bowl to prevent gum and varnish buildup in the carburetor.

DRAINING THE FLOAT BOWL

1. Turn the fuel tank valve to the OFF position.

2. Locate the drain screw on the bottom of the carburetor float bowl.

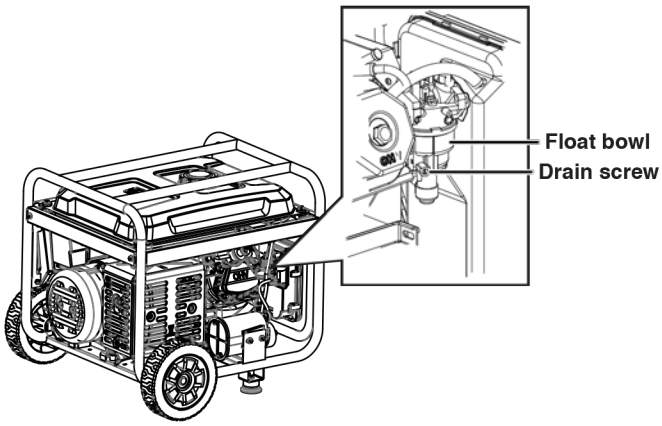

3. Place an appropriate gasoline container under the drain screw to catch the drained fuel.

4. Loosen the float bowl drain screw and allow the fuel to drain. Tighten the float bowl drain screw.

DRAINING THE FUEL TANK

If storing the generator for longer than six months, drain the fuel tank to prevent fuel separation, deterioration, and deposits in the fuel system.

1. Unscrew the fuel tank cap. Remove the fuel screen filter by slightly compressing it while removing it from the tank.

2. Using a commercially available gasoline hand pump (not included), siphon the gasoline from the fuel tank into an approved gasoline container. **DO NOT** use an electric pump.

3. Reinstall the fuel screen filter and the fuel tank cap.

4. Start the generator and allow it to run until the generator engine stops.

5. Push the Run/Stop switch to the Stop position.

6. Remove the spark plug.

7. Put a teaspoon of engine oil into the cylinder and pull the recoil handle until resistance is felt. At this position the piston is coming up on its compression stroke and both valves are closed. Storing the engine in this position will help prevent internal corrosion. Return the recoil handle gently.

8. Reinstall the spark plug. Leave the spark plug boot disconnected to prevent accidental starting.

VALVE CLEARANCE

NOTICE

Checking and adjusting valve clearance must be done when the engine is cold.

1. Remove the rocker arm cover and carefully remove the gasket. If the gasket is torn or damaged, it must be replaced.

2. Remove the spark plug so the engine can be rotated more easily.

3. Rotate the engine to top dead center (TDC) by pulling the recoil handle slowly. Looking through the spark plug hole, the piston should be at the top (both valves are closed).

4. Both the rocker arms should be loose at TDC on the compression stroke. If they are not, rotate the engine 360°.

5. Insert a feeler gauge between the rocker arm and the valve stem to measure valve clearance.

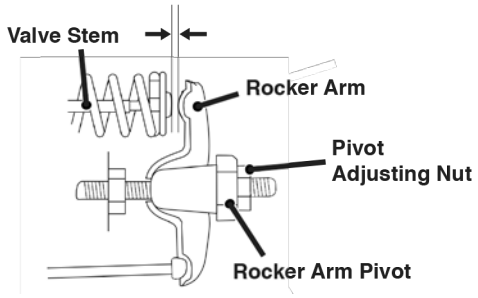

	Intake Valve	Exhaust Valve
Valve Clearance	0.0031 – 0.0047 in (0.08 – 0.12 mm)	0.0051 – 0.0067 in (0.13 – 0.17 mm)
Torque	8-12 N•m	8-12 N•m

6. If an adjustment is necessary, hold the rocker arm pivot and loosen the pivot adjusting nut.

7. Turn the rocker arm pivot to obtain the specified clearance. Hold the rocker arm pivot and re-tighten the pivot adjusting nut to the specified torque.

Torque: 106 inch-pound (12 N•m)

8. Perform this procedure for the other valve.

9. Install the gasket, rocker arm cover, and spark plug.

TROUBLESHOOTING

TROUBLESHOOTING

PROBLEM	POSSIBLE CAUSE	CORRECTION
Engine will not start	Out of fuel.	Refuel.
	Bad fuel, generator stored without treating or draining gasoline, or refueled with bad gasoline.	Drain the fuel tank. Refuel with fresh gasoline.
	Dirty air filter.	Clean the air filter.
	Low engine oil level stopped generator.	Check engine oil level. Add engine oil if low.
	Spark plug wet with fuel (flooded engine).	Wait five minutes. Turn Run/Stop switch to the OFF position. Pull recoil handle rapidly several times. If the generator does not start, remove spark plug and dry.
	Spark plug faulty, fouled, or improperly gapped.	Gap or replace the spark plug. Reinstall.
	Fuel system malfunction, fuel pump failure, ignition malfunction, valves stuck, etc.	Contact Westinghouse customer service toll-free at 1 (855) 944-3571.
	Choke partially open or closed.	Fully open or close the choke.
	CO sensor removed or modified	Return to original configuration
	CO sensor activated or system fault occurred	Relocate generator/ Contact Westinghouse customer service toll free at 1 (855) 944-3571.
Engine starts, then shuts down	Out of fuel.	Refuel.
	Incorrect engine oil level.	Check engine oil level.
	Dirty air filter.	Clean the air filter.
	Contaminated fuel.	Drain the fuel tank. Refuel with fresh gasoline.
	Defective low oil level switch.	Contact Westinghouse customer service toll-free at 1 (855) 944-3571.
Engine lacks power	Air filter restricted.	Clean or replace air filter.
	Bad fuel, generator stored without treating or draining gasoline, or refueled with bad gasoline.	Drain the fuel tank. Refuel with fresh gasoline.
	Fuel system malfunction, fuel pump failure, ignition malfunction, valves stuck, etc.	Contact Westinghouse customer service toll-free at 1 (855) 944-3571.
Engine runs rough or bogs when load applied	Dirty air filter.	Clean the air filter.
	Generator overloaded.	Unplug some devices.
	Faulty power tool or appliance.	Replace or repair tool or appliance. Stop and restart the engine.
	Fuel system malfunction, fuel pump failure, ignition malfunction, valves stuck, etc.	Contact Westinghouse customer service toll-free at 1 (855) 944-3571.
No power at AC receptacles	AC circuit breaker/s tripped.	Check AC loads and reset circuit breaker/s.
	Faulty power tool or appliance.	Replace or repair tool or appliance. Stop and restart the engine.
	Faulty generator.	Contact Westinghouse customer service toll-free at 1 (855) 944-3571.
Frost on the propane tank or regulator	If the temperature of the propane tank drops below the dew point, condensation on the tank may turn to frost or ice. This typically occurs in humid conditions.	Providing all the propane fuel handling equipment is functioning normally, no correction is needed.
	The Propane tank is not equipped with an Overfilling Prevention Device (OPD).	If you suspect your propane fuel tank is not equipped with an OPD device, discontinue operation immediately and replace the propane fuel tank with a propane tank equipped with a an OPD.
	Propane fuel tank overfilled.	If you suspect your propane fuel tank has been overfilled, discontinue operation immediately and return the propane fuel tank to the place of purchase or refilling.

TROUBLESHOOTING

PROBLEM	POSSIBLE CAUSE	CORRECTION
Propane fuel smell	Fuel regulator or fuel hose and fittings not securely sealed.	Using a soap solution check each connection and tighten as needed.
	Propane fuel regulator vent active.	The propane fuel regulator is equipped with a vent that will allow a small amount of propane fuel vapor to escape from the regulator when the propane tank valve is opened. This can be normal providing the venting of the propane is brief. If you suspect that this is abnormal, immediately discontinue use and have the propane regulator inspected by a qualified technician.
	Residual fuel from the carburetor dispersing after operation.	Normal, no correction is needed.
Poor performance or engine stalling on Propane	Propane fuel line kinked or crushed.	Inspect propane fuel line and remove kinks or other obstructions.
	Fuel selector valve not properly positioned.	Rotate the fuel valve fully until the pointer is directly in line with the desired fuel.
	Gasoline not purged from the carburetor before switching to propane.	Close the propane fuel tank valve. Move the fuel selector switch to gas. Start the engine and allow the engine to run until the gasoline has been consumed in the carburetor. Begin propane start up procedure.

EXPLODED VIEWS AND PARTS LIST

ENGINE EXPLODED VIEW

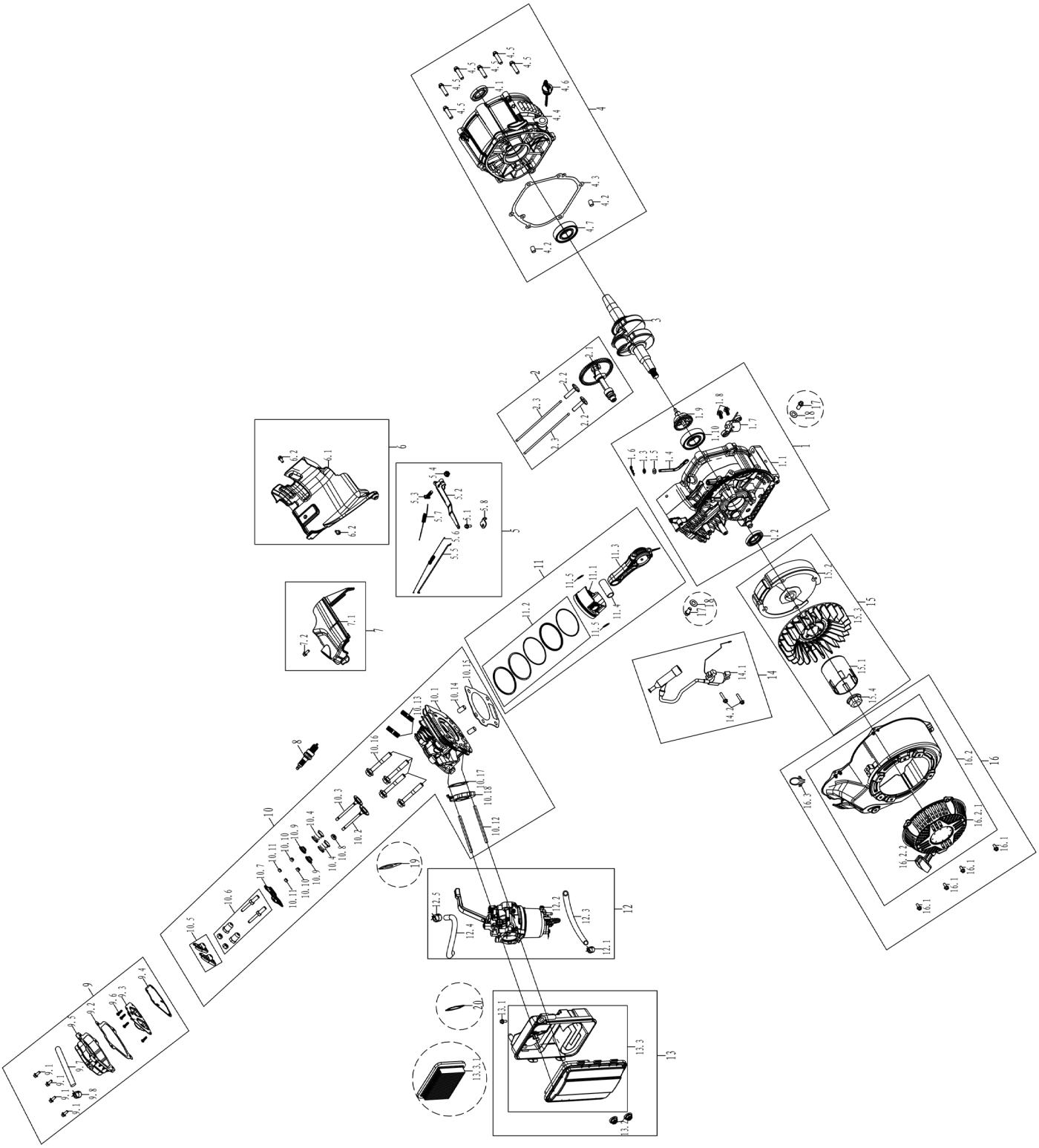

EXPLODED VIEWS

ENGINE PARTS LIST

NO.	Part #	Description
1		CRANKCASE ASSEMBLY
1.1	400201	CRANKCASE
1.2	93509	CRANKCASE OIL SEAL
1.3	93520	SWING ROD OIL SEAL
1.4	403901	SWINGING ROD
1.5	96804	SWINGING ROD GASKET
1.6	383902	RETAINING CLIP
1.7	245106	OIL SENSOR
1.8	91329	BOLT
1.9	404301	CENTRIFUGAL GOVERNOR GEAR
1.10	93012	BEARING
2		CAMSHAFT ASSEMBLY
2.1	402002	CAMSHAFT
2.2	406101	VALVE LIFTER
2.3	401901	PUSH ROD
3	400301	CRANKSHAFT
4		CRANKCASE COVER ASSEMBLY
4.1	93509	CRANKCASE OIL SEAL
4.2	240904	CRANKCASE LOCATING PIN
4.3	96222	CRANKCASE SEAL WASHER
4.4	400101	CRANKCASE COVER
4.5	91347	BOLT
4.6	245601-295	DIPSTICK
4.7	93012	BEARING
5		SPEED CONTROL BRACKET ASSEMBLY
5.1	91329	BOLT
5.2	404001	SPEED REGULATING ARM
5.3	91822	BOLT
5.4	90016	NUT
5.5	402701	THROTTLE LEVER
5.6	404201	SPRING C
5.7	404101	SPRING B
5.8	407701	SPEED CONTROL BRACKET
6		LOWER GUARD ASSEMBLY
6.1	407601	LOWER GUARD
6.2	91325	BOLT
7.1	407501	WIND-LEAD-COVER
7.2	91325	BOLT
8	97108	SPARK PLUG
9		CYLINDER HEAD COVER ASSEMBLY
9.1	91329	BOLT
9.2	96225	CYLINDER HEAD COVER GASKET
9.3	401102	CYLINDER HEAD INTERNAL COVER
9.4	96226	INTERNAL COVER GASKET
9.5	401101	CYLINDER HEAD COVER
9.6	92036	SCREW
9.7	95603	BREATHER TUBE

NO.	Part #	Description
9.8	94435	BREATHER TUBE CLIP
10	50020048	CYLINDER HEAD KIT ASSEMBLY
10.1	401002	CYLINDER HEAD
10.2	401701	INTAKE VALVE
10.3	405901	EXHAUST VALVE
10.4	406001	VALVE SPRING
10.5	402101	ROCKING ARM
10.6	91818	BOLT
10.7	402201	VALVE RETAINER ASSEMBLY
10.8	241806	VALVE SEAL
10.9	241817	VALVE SPRING RETAINER
10.10	329930	VALVE LOCK CLIP
10.11	241804	TOP CAP
10.12	91022	DOUBLE END BOLT M6
10.13	91007	DOUBLE END BOLT M6
10.14	260901	CYLINDER HEAD LOCATING PIN
10.15	96223	CYLINDER HEAD GASKET
10.16	91452	BOLT
10.17	96235	GASKET
10.18	402301	CARBURETOR CONNECTION BLOCK
11		PISTON & PISTON RING ASSEMBLY
11.1	401201	PISTON
11.2	401601	PISTON RING
11.3		CONNECTING ROD ASSEMBLY
11.4	405501	PISTON PIN
11.5	241301	PISTON PIN RING
12		CARBURETOR ASSEMBLY
12.1	94403	FUEL LINE CLAMP
12.2	402804-295	CARBURETOR ASSEMBLY
12.3	95727L	FUEL LINE
12.4	517917	LOW PRESSURE HOSE
12.5	599302	HOOP
13		AIR FILTER ASSEMBLY
13.1	91329	BOLT
13.2	90016	NUT
13.3	402901	AIR FILTER
13.3.1	5941	FILTER ELEMENT
14		IGNITER ASSEMBLY
14.1	97552	IGNITER
14.2	91331	BOLT
15	50180016	FLYWHEEL ASSEMBLY
15.1	244508	STARTER PULLEY
15.2	240401	FLYWHEEL
15.3	404601	IMPELLER
15.4	90003	NUT
16		RECOIL STARTER ASSEMBLY
16.1	91325	BOLT

ENGINE PARTS LIST CONTINUED

NO.	Part #	Description
16.2		RECOIL STARTER ASSEMBLY
16.2.1	5943	RECOIL HANDLE
16.2.2	5942-221	RECOIL COVER
16.3	240801	CABLE CLIP
17	91816	BOLT
18	94007	OIL DRAIN BOLT WASHER
19	96224	GASKET
20	94324	STEEL WASHER

EXPLODED VIEWS

GENERATOR EXPLODED VIEW

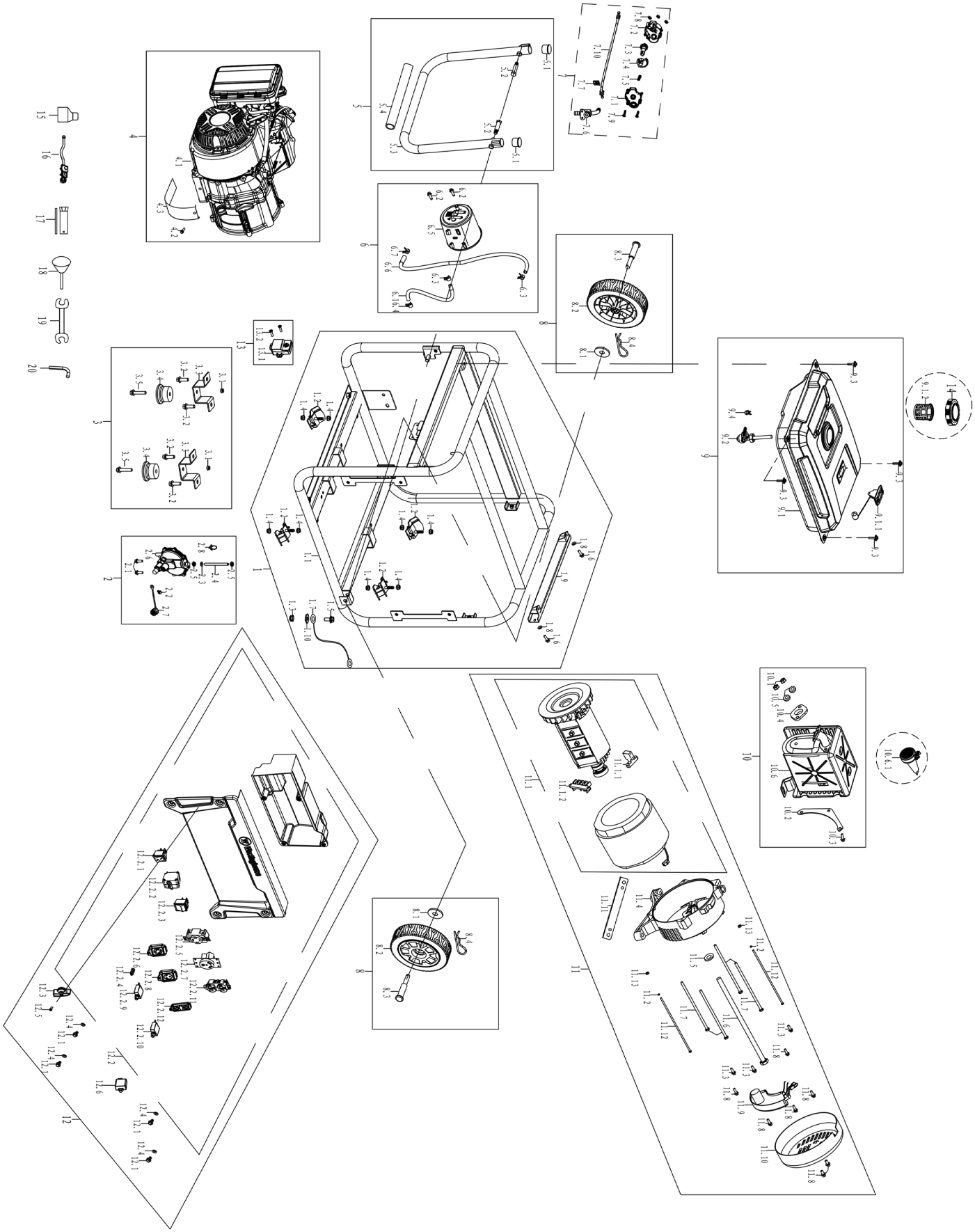

GENERATOR PARTS LIST

NO.	Part #	Description
1		FRAME ASSEMBLY
1.1	774072-116	FRAME
1.2	531318	ISOLATION SUPPORT
1.3	90016	NUT M6
1.4	90018	NUT M8
1.5	91325	BOLT M6
1.6	91327	BOLT M6
1.7	544301	FRAME WIRE
1.8	96120	PAPER WASHER
1.9	530324-116	MOVABLE RECTANGLE PIPE
1.10	94002	TOOTH WASHER
2		PRESSURE REDUCING VALVE
2.1	91325	BOLT M6
2.2	91327	BOLT M6
2.3	96120	PAPER WASHER
2.4	517336	LOW PRESSURE HOSE
2.5	599302	LOW PRESSURE HOSE HOOP
2.6	50280035	PRESSURE REDUCING VALVE
2.7	519387	PROTECTIVE CASE
2.8	240801	Q-SHAPE CABLE CLIP
3	60150028	FOOT BRACKET ASSEMBLY
3.1	90023	NUT M6
3.2	91343	BOLT M8
3.3	525314-116	FOOT BRACKET ASSEMBLY
3.4	531115	FOOT BRACKET ISOLATION SUPPORT
3.5	91333	BOLT M6
4		ENGINE ASSEMBLY
4.1	1148274210026	ENGINE
4.2	91322	BOLT M5
4.3	539602	CRANKCASE COVER SHIELD
5	60180034	HANDLE WELDING KIT ASSEMBLY
5.1	527613	HANDLE PLUG
5.2	527611	HANDLE MOUNTING BOLT
5.3	526639-116	HANDLE
5.4	528609	HANDLE RUBBER SLEEVE
6	60570005	CARBON CANNISTER ASSEMBLY
6.1	95021	CARBON CANISTER AND AIR FILTER CONNECTING PIPE
6.2	91327	BOLT M6
6.3	94402	FUEL LINE CLAMP
6.4	94408	FUEL LINE CLAMP
6.5	543601L	CARBON CANISTER ASSEMBLY
6.6	95020	CARBON CANISTER AND FUEL TANK CONNECTING PIPE
6.7	94423	FUEL LINE CLAMP
7	60550001	DUAL FUEL SELECTOR SWITCH
7.2	599038	LOWER COVER

NO.	Part #	Description
7.3	599039	DRIVE SHAFT
7.4	599040	DRIVE GEAR
7.5	529804	RETURN SPRING
7.6	599054	FUEL VALVE
7.7	260805	LOCK CLIP
7.8	90034	NUT M4
7.9	92007	SCREW M4
7.10	599622	CABLE
8		WHEEL ASSEMBLY
8.1	94224	FLAT WASHER
8.2	523311	WHEEL
8.3	524320	AXLE
8.4	548302	COTTER PIN
9		FUEL TANK ASSEMBLY
9.1	700277L-116	FUEL TANK
9.1.1	6794	FUEL GAUGE
9.1.2	518801	FUEL TANK FILTER
9.2	518207	FUEL SWITCH
9.3	91460	BOLT M6
9.4	94403	FUEL LINE CLAMP
10		EXHAUST MUFFLER ASSEMBLY
10.1	90011	NUT M8
10.2	520308	MUFFLER MOUNTING BRACKET
10.3	91343	BOLT M8
10.4	96252	EXHAUST GASKET
10.5	94206	SPRING WASHER
10.6	705658	MUFFLER
10.6.1	6790	SPARK ARRESTER
11		ALTERNATOR ASSEMBLY
11.1	755066	ALTERNATOR
11.1.1	599019	CARBON BRUSH
11.1.2	6560	TERMINAL ASSEMBLY
11.2	94204	SPRING WASHER
11.3	91323	BOLT M5
11.4	532306	ALTERNATOR TAIL BRACKET
11.5	96813	GASKET
11.6	91721	BOLT M10
11.7	91619	BOLT M6
11.8	91322	BOLT M5
11.9	534301	AVR
11.10	533302-221	ALTERNATOR TAIL COVER
11.11	532303-052	TAIL BRACKET FIXING PLATE
11.12	91513	BOLT M5
11.13	90009	NUT M5
12	60040064	PANEL ASSEMBLY
12.1	91327	BOLT M6
12.2	714383	PANEL ASSEMBLY

EXPLODED VIEWS

GENERATOR PARTS LIST CONTINUED

NO.	Part #	Description
12.2.2	6523-22	BREAKER
12.2.3	6508	VOLTAGE SELECTION SWITCH
12.2.4	6386	GROUND TERMINAL ASSEMBLY
12.2.5	6385	L14-30R RECEPTACLE
12.2.6	6848	WATERPROOF CAP
12.2.7	6015	RV SOCKET
12.2.8	6849	WATERPROOF CAP
12.2.9	6441-30	THERMAL PROTECTOR
12.2.10	6441-20	THERMAL PROTECTOR
12.2.11	6032	L5-20R RECEPTACLE
12.2.12	6846	WATERPROOF CAP
12.3		SWITCH TURNTABLE ASSEMBLY
12.4	96120	PAPER WASHER
12.5	92083	SCREW M6
12.6	599065	CO SHUTDOWN ACTUATOR
13	60450006	CO MODULE ASSEMBLY
13.1	599063	CO MODULE
13.2	92270	BOLT M4
14	519215	FUEL CAP
15	99635	OIL BOTTLE
16	545331	PRESSURE REDUCING VALVE
17	99010	SPARK PLUG WRENCH
18	500942	FUNNEL
19	99025	WRENCH
20	94432	NYLON BRAIDED TUBE

SCHEMATICS
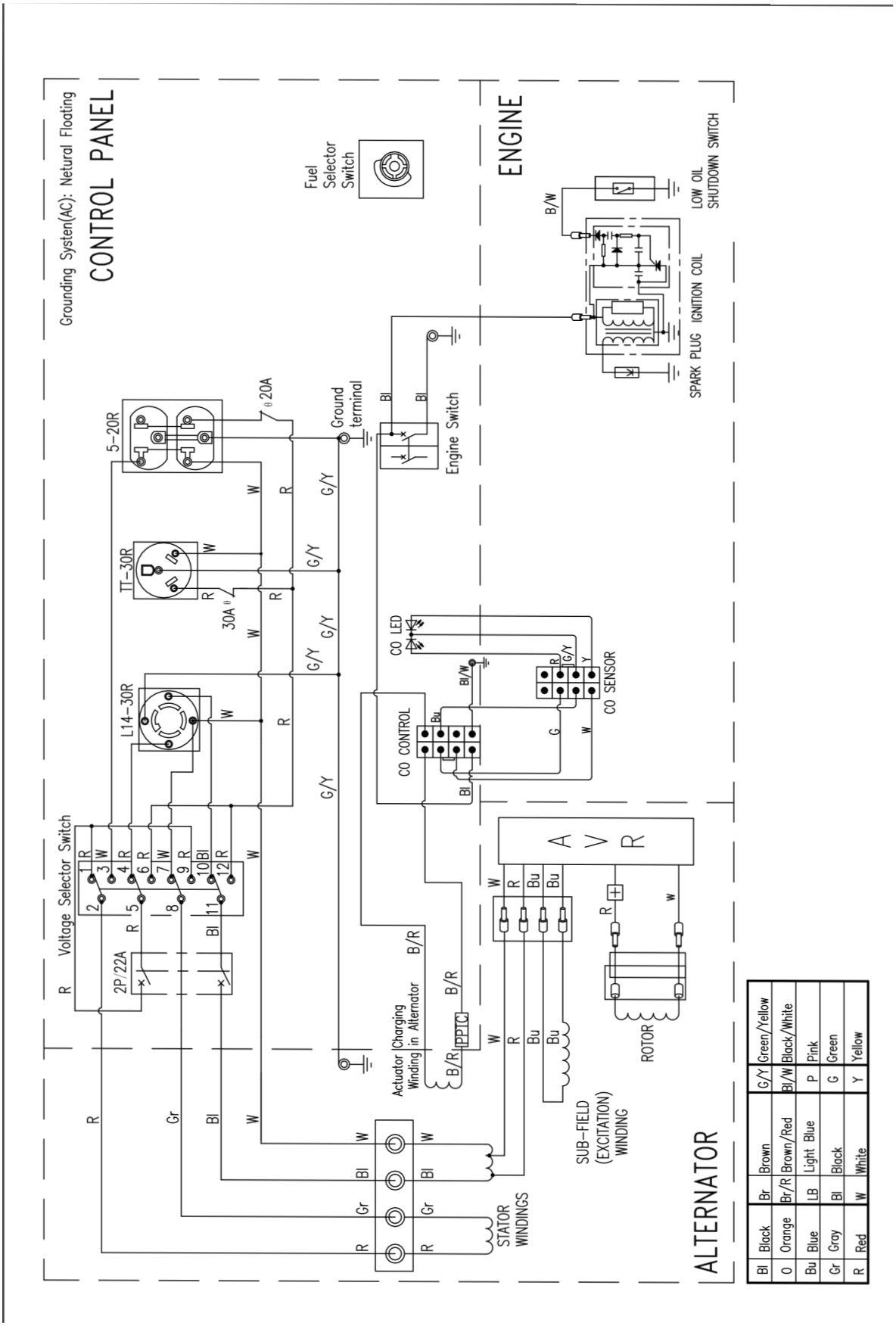
SCHEMATICS