KM4X™

The Next Generation
Spindle Connection System



INNOVATIONS
CATALOG **2017**

kennametal.com

KENNAMETAL®

KENNAMETAL®

KM4X™

The newest modular tooling connection offers higher clamping forces and interference levels that lead to a robust connection and extremely high stiffness and bending load capacity resulting in unmatched performance from both lathe and machining centers.



Table of Contents

Introduction A2–A11

KM4X63 • Static and Rotating Tools B1–B84

Technical Manual C1–C33

Glossary C34–C35

Global Contacts C36–C37

Information Request Form C38

New Size: KM4X63

KM4X™

The KM4X system is the best large, heavy-duty spindle connection for rigidity because it has superb balance between bending and torsion capabilities from the machine tool.

Choosing What's Right

7/24 ISO Taper



- One surface contact.
- Relatively low stiffness.
- Possible runout due to taper fitment.
- Low axial accuracy.

7/24 Taper Face Contact



- Two surface contact.
- Higher static and dynamic stiffness.
- Higher axial and radial accuracy.
- Rigid system.

HSK

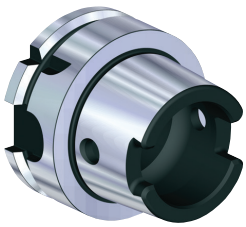

- Two surface contact.
- Higher axial and radial accuracy.
- Less mass — faster quick change and higher speeds.
- Higher stiffness than 7/24 tapers.

Good

Better

The Next Generation Spindle Connection System

KMTS (ISO)

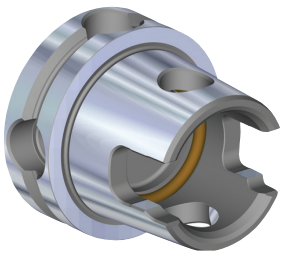

- Three surface contact.
- Superior static and dynamic stiffness.
- Static and rotating applications.
- Higher speed.
- Higher stiffness than HSK and 7/24 tapers.

KM4X

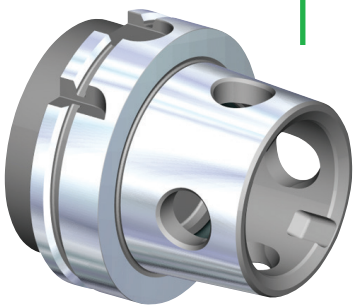

- Three surface contact.
- Superior static and dynamic stiffness.
- Static and rotating applications.
- Highest maximum speed.
- ISO (HSK) tool change groove.
- Sizes available:
  – KM4X63
  – KM4X100
  – KM4X125

The KM4X system is the latest modular tooling connection targeted at heavy-duty machining operations and is a top choice for machining large, structural tough-to-machine materials like titanium for the aerospace industry.

Best

KM4X™ The Latest Innovation in Spindle Interface Technology

- Offers the most rigid connection able to withstand extremely high bending due to a combination of high interference and high clamping forces.
- Provides 3x more bending capacity than comparable face contact systems.
- KM4X is the only connection that maintains stiffness at elevated rotational speeds and is suitable for a range of applications from low speeds with high torque to very high spindle speeds with low torque.
- Maintains a better balance between bending and torsion capabilities.
- The ability to retrofit the KM4X system to an existing machine tool offers the added advantage of increasing throughput.
- Heavy-duty, rigid configuration with evenly distributed clamping force.
- Simple design enables front-loaded spindle configuration.
- Balanced-by-design for high spindle speed capacity.

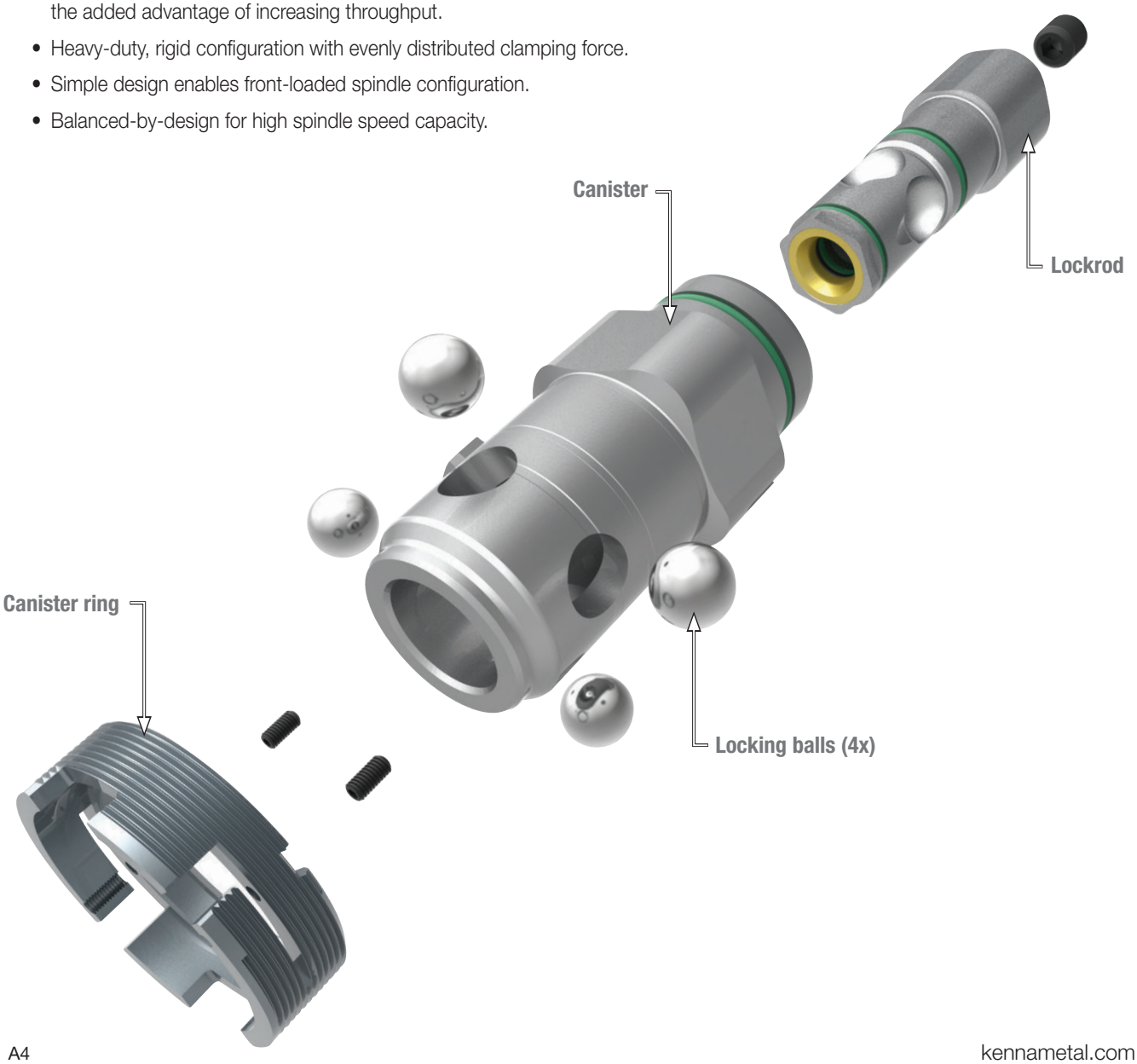

KM4X™ Rotating Spindle Components

The use of standardized spindle components makes the KM4X system ideal for new machines and retrofitting into existing machines.

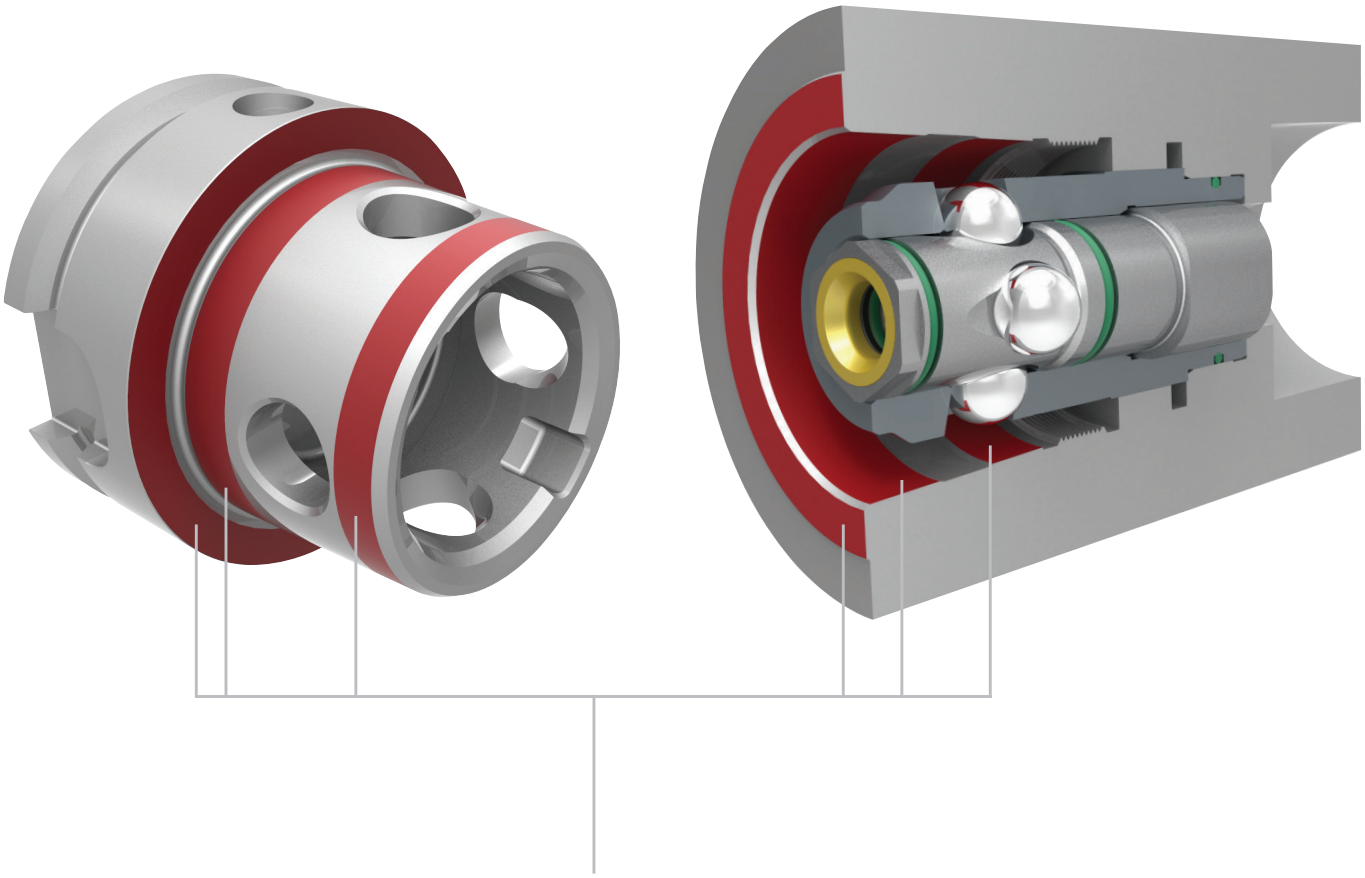

The KM4X system's three-surface contact enables improved stability and accuracy. Optimized clamping force distribution and interference fit provides higher stiffness.

Why Bending Load Capacity Is Important

When machining tough materials like titanium, cutting speeds are relatively low due to thermal effects on cutting tools. Over the years, machine tool builders responded to this issue by improving stiffness and damping on spindles and machine structures. Spindles have been designed with abundant torque at low rotational speeds. Nevertheless, the spindle connection has remained the weak link in the system.

The spindle connection must provide torque and bending load capacity compatible with the machine tool specifications and the requirements for higher productivity. It becomes obvious that in end-milling applications where the projection lengths are typically greater, the limiting factor is the bending load capacity of the spindle interface.

The lines on the chart to the right represent the load capacity of HSK, PSC, and the KM4X™ system. The shaded areas represent the typical requirements for heavy-duty applications in various machining processes. The KM4X system is the only system that can deliver the torque and bending capacity required for achieving high-performance machining. Some systems may be able to transmit considerable amounts of torque, but the cutting forces also generate bending moments that exceed the interface's limits before torque limits are exceeded.



IMPORTANT

Information shown on the following charts was developed exclusively for use with KM4X tooling in static conditions. The results are not valid for any other system. To account for cutting force fluctuations in dynamic conditions, a reduction of 20–40% should be applied to the loads shown in charts.

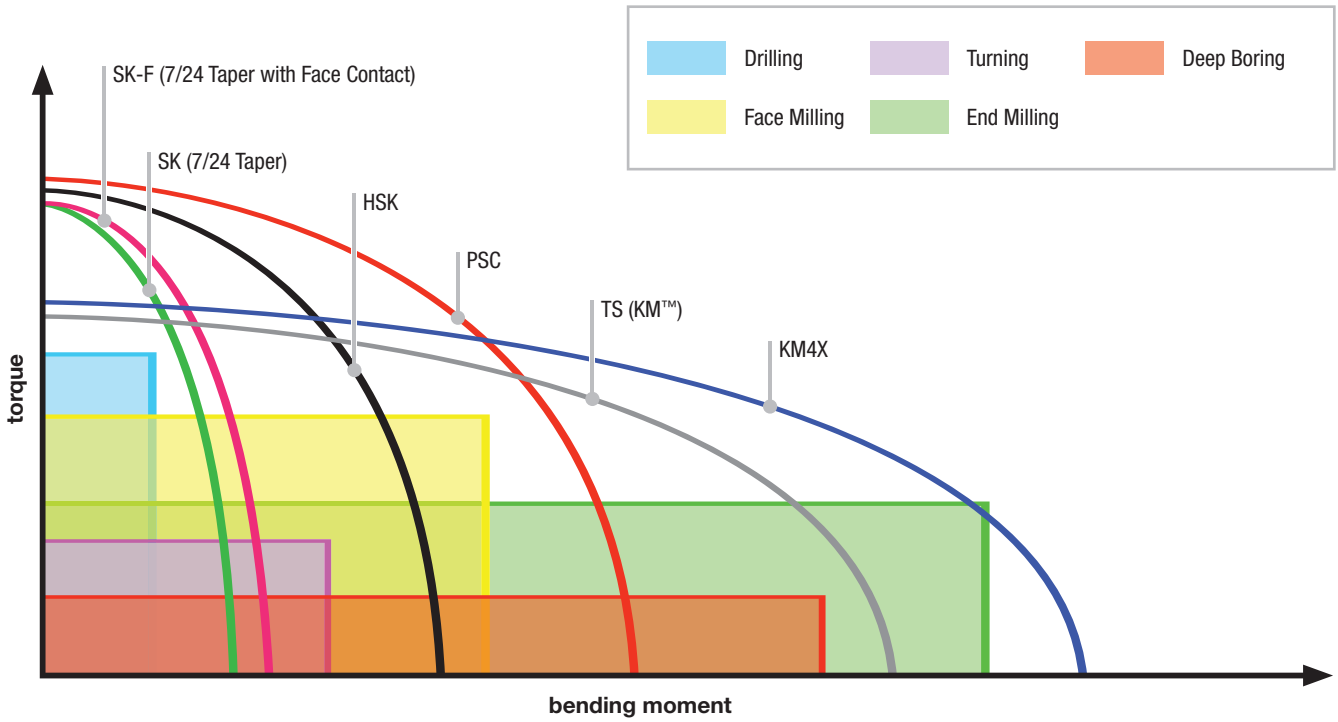

Chart shows load-deflection comparision of steep taper, HSK, PSC, KM-TS™, and KM4X™.

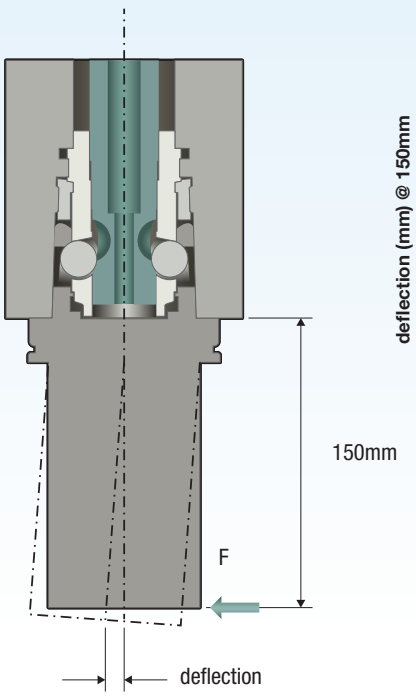

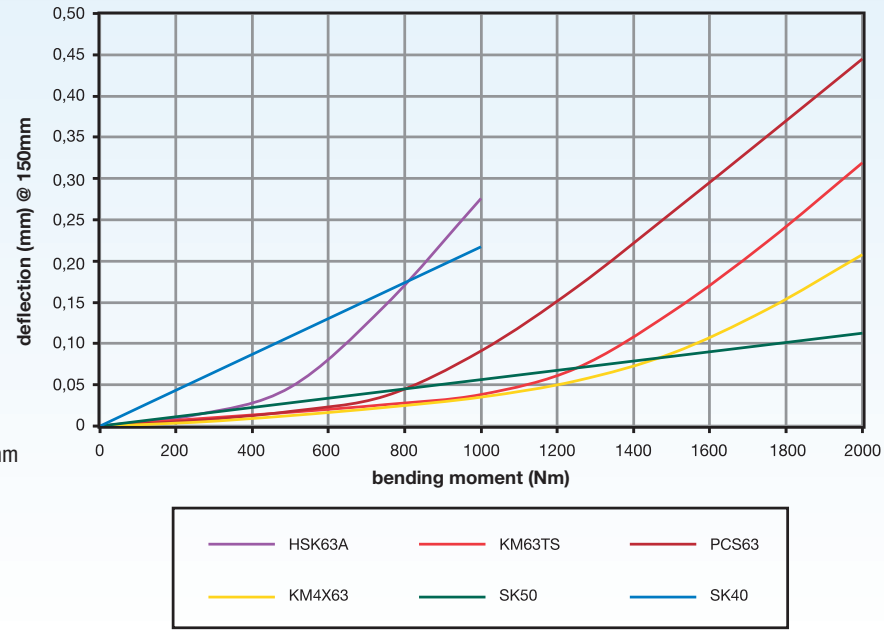

KM4X™ Capability Overview



Clamping Units



STAR/L Single Square Shank Adapters



KM™ Extension and Reducer



Kenclamp™



Centerline



ISO Turning



Top Notch™



LT Threading

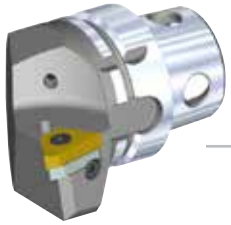

Beyond™ Evolution™ Grooving and Cut-off



Internal Cutting Units



Tunable Boring Bars



New Size: KM4X63

Whistle Notch™ Adapters



End Mill Adapters



Shell Mill Adapters



Screw-On Adapters



Drill Fix™ Adapters



Shrink Fit Adapters



HydroForce™ Adapters



Trendline Adapters



Slim Line Adapters



Collet Chuck Adapters



Gage Bars



ATC Adjustment Heads



Min. Max. and Timing Heads





Power Check Adapters



Accessories



KM4X63 Speed Capability

KM4X™ uses more interference between the male and female taper leading to:

- Higher rigidity
  - – Better distribution of clamping force between face and taper.
  - – More rigid connection that allows for higher bending and torsion loads.
- Higher spindle rotating speed
  - – As RPM increases, the spindle taper expands at a faster rate than the tool taper.
  - – Higher interference allows for a higher RPM before the two tapers lose contact.

KM4X63 Features

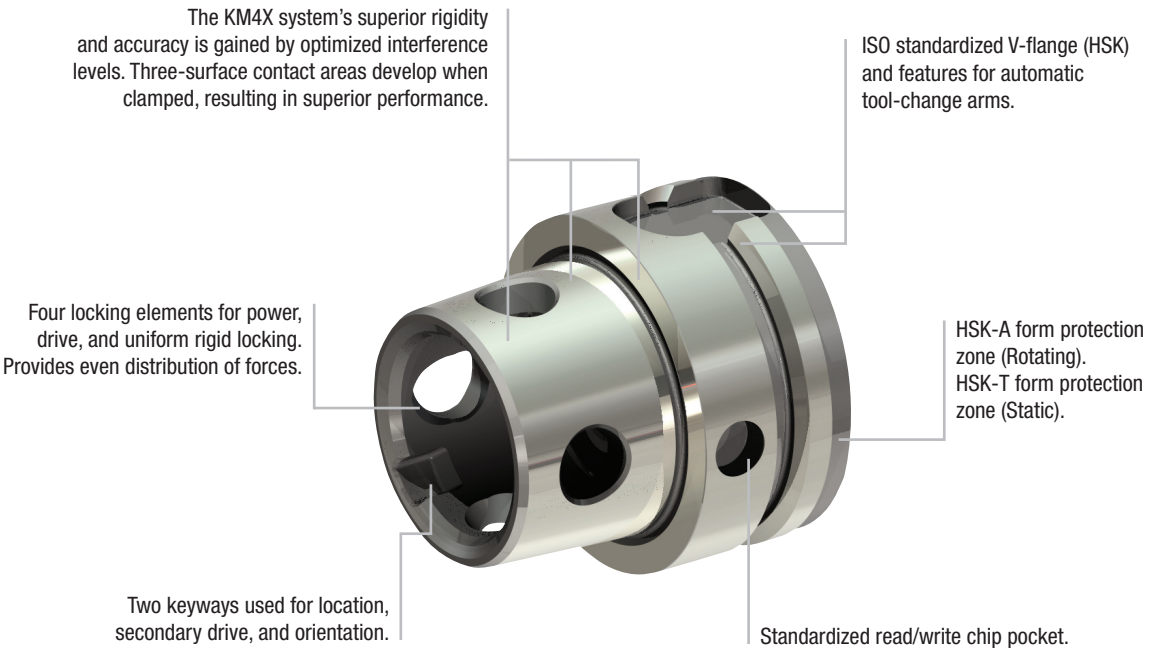

New Size: KM4X63

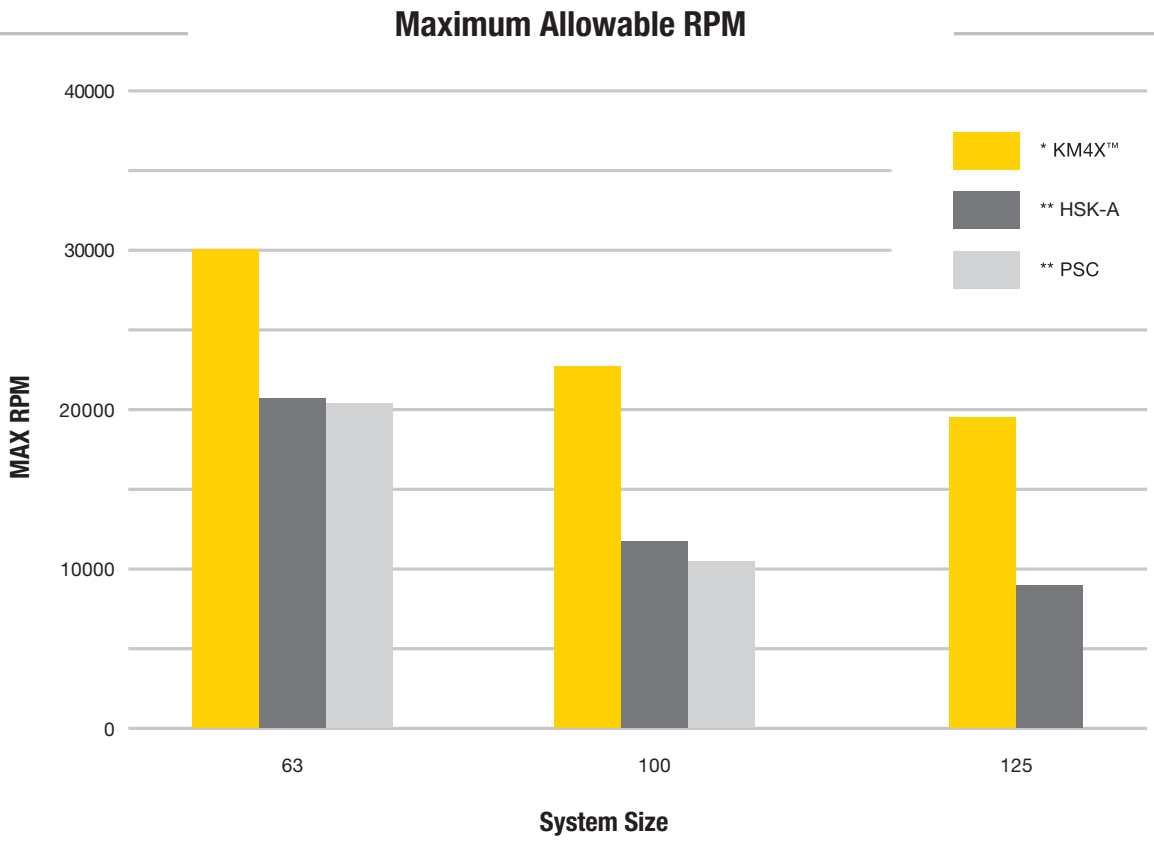

* Calculated value based on theoretical speed when tapers separate.
** Data published by Sandvik® at http://www.sandvik.coromant.com/en-gb/knowledge/tooling-systems/machine-and-tooling-systems-considerations/spindle-selection/recommendations/pages/default.aspx




KM4X

KM4X63 • Static and Rotating Tools

KM4X63 • Static and Rotating Tools B2–B84

KM4X63 Cutting Units B2–B39

KM4X63 Internal Cutting Units B40–B48

KM4X63 Adapters B49–B52

KM4X63 Shank Tools B54–B74

KM4X-LOC II Clamping Units B75–B76

KM4X63 Spindle Clamping System B77–B78

Accessories B79–B84



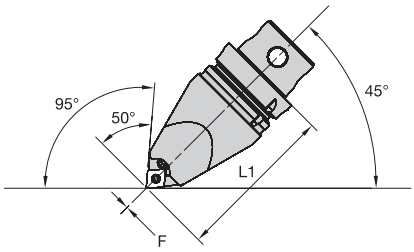

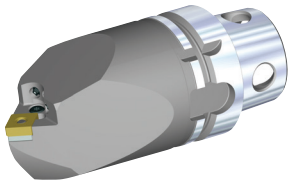

PCMN 50° • 95° Application • Centerline • HPC

		L1		F				
order number	catalog number	mm	in	mm	in	gage insert	kg	lbs
6275081	KM4X63PCMNN12115HPC	115	4.528	0	.000	CN..120408/CN..432	2,09	4.60

Spare Parts



catalog number	shim	lever screw	shim pin	toggle lever	punch	coolant nozzle	coolant plug	coolant plug	nozzle driver
KM4X63PCMNN12115HPC	512.112	514.123	513.023	511.023	515.018	NZLM4060140	PMP08352	PMP08360	NDS027M

NOTE: KM4X™ coolant unit and wrench are available and must be ordered separately; see page B84.



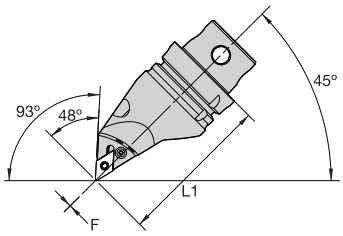

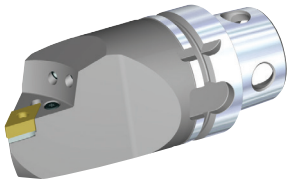

Left-Hand Tool

PDMN 48° • 93° Application • Centerline • HPC

		L1		F				
order number	catalog number	mm	in	mm	in	gage insert	kg	lbs
left hand								
6275082	**KM4X63PDMNL15115HPC**	115	4.528	0	.000	DN..150608/DN..442	1,83	4.04

Spare Parts



catalog number	shim	lever screw	shim pin	toggle lever	punch	coolant nozzle	coolant plug	coolant plug	nozzle driver
left hand									
KM4X63PDMNL15115HPC	**512.153**	**514.128**	**513.023**	**511.024**	**515.018**	**NZLM4060140**	**PMP08352**	**PMP08360**	**NDS027M**

NOTE: KM4X™ coolant unit and wrench are available and must be ordered separately; see page B84.



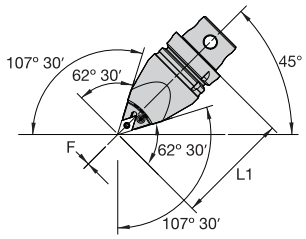

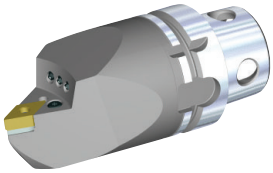

PDNN 62° 30' • 107° 30' Application • Centerline • HPC

		L1		F				
order number	catalog number	mm	in	mm	in	gage insert	kg	lbs
6275083	KM4X63PDNNN15115HPC	115	4.528	0	.000	DN..150608/DN..442	1,95	4.31

Spare Parts



catalog number	shim	lever screw	shim pin	toggle lever	coolant nozzle	coolant plug	coolant plug	nozzle driver
KM4X63PDNNN15115HPC	512.153	514.128	513.023	511.024	NZLM4060140	PMP08352	PMP08360	NDS027M

NOTE: KM4X™ coolant unit and wrench are available and must be ordered separately; see page B84.



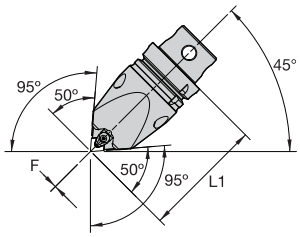

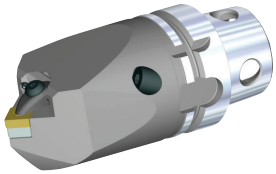

DCMN 50° • 95° Application • Centerline • HPC

		L1		F				
order number	catalog number	mm	in	mm	in	gage insert	kg	lbs
6275084	KM4X63DCMNN12115HPC	115	4.528	0	.000	CN..120408/CN..432	2,14	4.71

Spare Parts









catalog number	shim	shim screw	clamp assembly	pin	coolant nozzle	coolant plug	nozzle driver
KM4X63DCMNN12115HPC	ICSN443	KMSP415IP	CM234R ASSY	SSP025016M	NZLM4060140	PMP08360	NDS027M

NOTE: KM4X™ coolant unit and wrench are available and must be ordered separately; see page B84.



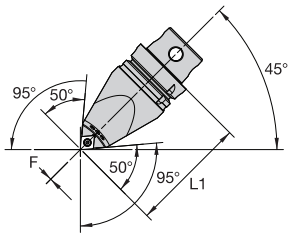

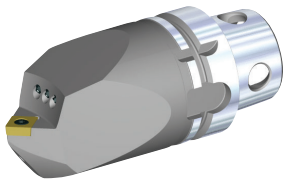

SCMC 50° • 95° Application • Centerline • HPC

		L1		F				
order number	catalog number	mm	in	mm	in	gage insert	kg	lbs
6275085	KM4X63SCMCN12115HPC	115	4.528	0	.000	CN..120408/CN..432	2,09	4.60

Spare Parts







catalog number	insert screw	coolant nozzle	coolant plug	coolant plug	nozzle driver
KM4X63SCMCN12115HPC	MS1158	NZLM4060140	PMP08352	PMP08360	NDS027M

NOTE: KM4X™ coolant unit and wrench are available and must be ordered separately; see page B84.



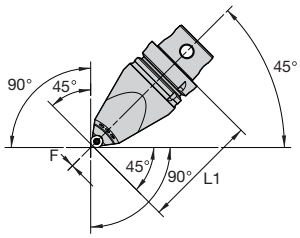

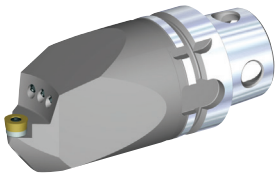

SRDC 0° • 45° Application • Centerline • HPC

		L1		F				
order number	catalog number	mm	in	mm	in	gage insert	kg	lbs
6275086	KM4X63SRDCN12115HPC	115	4.528	0	.000	RC..1204M0	2,10	4.63

Spare Parts









catalog number	insert screw	shim	shim screw	coolant nozzle	coolant plug	coolant plug	nozzle driver
KM4X63SRDCN12115HPC	MS1156	SKRN1203M0	SRS3	NZLM4060140	PMP08352	PMP08360	NDS027M

NOTE: KM4X™ coolant unit and wrench are available and must be ordered separately; see page B84.



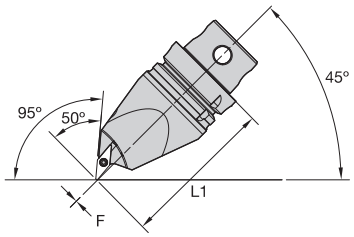

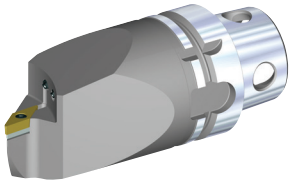

Left-Hand Tool

SVMB 50° • 95° Application • Centerline • HPC

order number	catalog number	L1 mm	L1 in	F mm	F in	gage insert	kg	lbs
left hand								
6275087	**KM4X63SVMBL16115HPC**	115	4.528	0	.000	VB..160408/VB..332	2,03	4.47

Spare Parts









catalog number	insert screw	shim	shim screw	coolant nozzle	coolant plug	coolant plug	nozzle driver
left hand							
KM4X63SVMBL16115HPC	**MS1156**	**SKVN343**	**SRS3**	**NZLM4060140**	**PMP08352**	**PMP08360**	**NDS027M**

NOTE: KM4X™ coolant unit and wrench are available and must be ordered separately; see page B84.



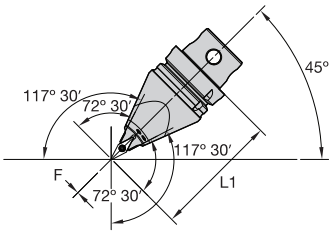

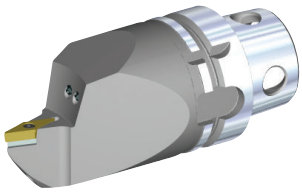

SVVB 72° 30' • 117° 30' Application • Centerline • HPC

		L1		F				
order number	catalog number	mm	in	mm	in	gage insert	kg	lbs
6275088	KM4X63SVVBN16115HPC	115	4.528	0	.000	VB..160408/VB..332	1,83	4.03

Spare Parts



catalog number	insert screw	shim	shim screw	coolant nozzle	coolant plug	coolant plug	nozzle driver
KM4X63SVVBN16115HPC	MS1156	SKVN343	SRS3	NZLM4060140	PMP08352	PMP08360	NDS027M

NOTE: KM4X™ coolant unit and wrench are available and must be ordered separately; see page B84.



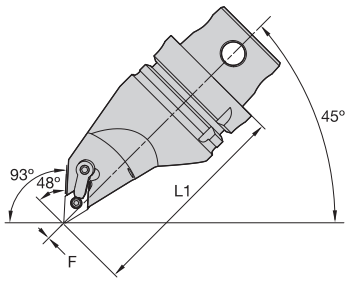

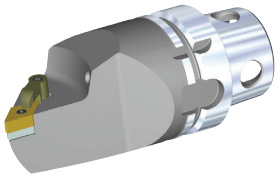

Left-Hand Tool

MDMN 48° • 93° Application • Centerline

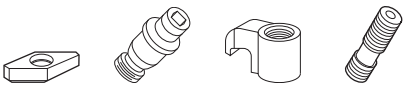

order number	catalog number	L1 mm	L1 in	F mm	F in	gage insert	shim	lock pin	clamp	clamp screw	kg	lbs
right hand												
5552727	**KM4X63MDMNR1504115**	115	4.528	0	.000	DN..150408/DN..432	**IDSN442**	**KLM46L**	**CKM23**	**STCM11**	1,82	4.01
5552728	**KM4X63MDMNR1506115**	115	4.528	0	.000	DN..150608/DN..442	**IDSN432**	**KLM46L**	**CKM23**	**STCM11**	1,82	4.01
left hand												
5552729	**KM4X63MDMNL1504115**	115	4.528	0	.000	DN..150408/DN..432	**IDSN442**	**KLM46L**	**CKM23**	**STCM11**	1,81	3.99
5552730	**KM4X63MDMNL1506115**	115	4.528	0	.000	DN..150608/DN..442	**IDSN432**	**KLM46L**	**CKM23**	**STCM11**	1,81	3.99

NOTE: KM4X™ coolant unit and wrench are available and must be ordered separately; see page B84.



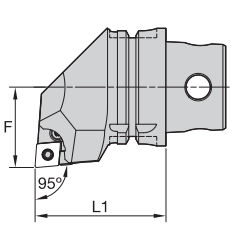

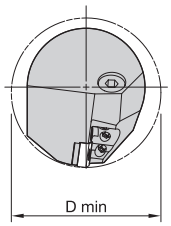

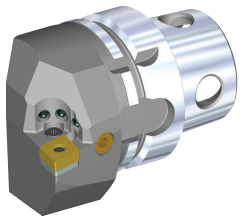

PCLN 95° • HPC

order number	catalog number	L1 mm	L1 in	F mm	F in	D min mm	D min in	gage insert	kg	lbs
right hand										
5720353	**KM4X63PCLNR12HPC**	70	2.756	43	1.693	80	3.150	CN..120408/CN..432	1,51	3.33
5720355	**KM4X63PCLNR16HPC**	70	2.756	43	1.693	80	3.150	CN..160612/CN..543	1,49	3.28
left hand										
5720354	**KM4X63PCLNL12HPC**	70	2.756	43	1.693	80	3.150	CN..120408/CN..432	1,51	3.33
5720356	**KM4X63PCLNL16HPC**	70	2.756	43	1.693	80	3.150	CN..160612/CN..543	1,49	3.28

Spare Parts

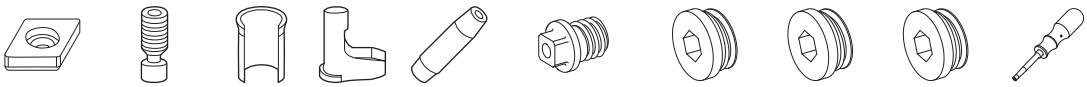

catalog number	shim	lever screw	shim pin	toggle lever	punch	coolant nozzle	coolant plug	coolant plug	coolant plug	nozzle driver
right hand										
KM4X63PCLNR12HPC	**512.112**	**514.123**	**513.023**	**511.023**	**515.018**	**NZLM4060140**	**PMP08352**	**PMP08360**	**PMP08361**	**NDS027M**
KM4X63PCLNR16HPC	**512.117**	**514.125**	**513.025**	**511.025**	**515.022**	**NZLM4060140**	**PMP08352**	**PMP08360**	**PMP08361**	**NDS027M**
left hand										
KM4X63PCLNL12HPC	**512.112**	**514.123**	**513.023**	**511.023**	**515.018**	**NZLM4060140**	**PMP08352**	**PMP08360**	**PMP08361**	**NDS027M**
KM4X63PCLNL16HPC	**512.117**	**514.125**	**513.025**	**511.025**	**515.022**	**NZLM4060140**	**PMP08352**	**PMP08360**	**PMP08361**	**NDS027M**

NOTE: Nozzle driver must be purchased separately.
Coolant nozzles with various orifice diameters are available.
KM4X™ coolant unit and wrench are available and must be ordered separately; see page B84.



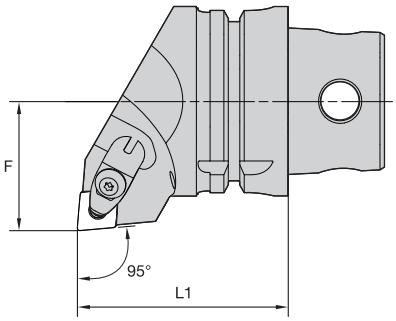

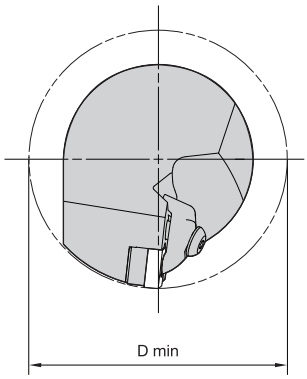

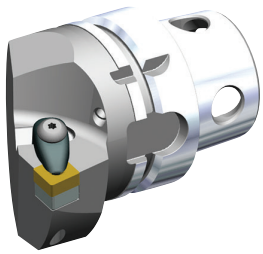

DCLN 95°

order number	catalog number	L1 mm	L1 in	F mm	F in	D min mm	D min in	gage insert	kg	lbs
right hand										
5552676	**KM4X63DCLNR12KC04**	70	2.756	43	1.693	86	3.386	CN..120408/CN..432	1,40	3.08
5543407	**KM4X63DCLNR16KC06**	70	2.756	43	1.693	86	3.386	CN..160612/CN..543	1,37	3.02
left hand										
5552674	**KM4X63DCLNL12KC04**	70	2.756	43	1.693	86	3.386	CN..120408/CN..432	1,40	3.09
5552675	**KM4X63DCLNL16KC06**	70	2.756	43	1.693	86	3.386	CN..160612/CN..543	1,39	3.06

Spare Parts






catalog number	shim	shim screw	clamp assembly	pin
right hand				
KM4X63DCLNR12KC04	**ICSN443**	**KMSP415IP**	**CM234R ASSY**	**SSP025016M**
KM4X63DCLNR16KC06	**ICSN543**	**KMSP515IP**	**CM209R ASSY**	**SSP025018M**
left hand				
KM4X63DCLNL12KC04	**ICSN443**	**KMSP415IP**	**CM234R ASSY**	**SSP025016M**
KM4X63DCLNL16KC06	**ICSN543**	**KMSP515IP**	**CM209R ASSY**	**SSP025018M**

NOTE: KM4X™ coolant unit and wrench are available and must be ordered separately; see page B84.



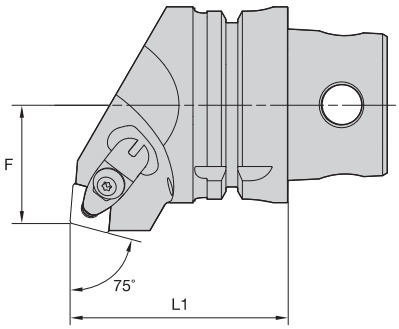

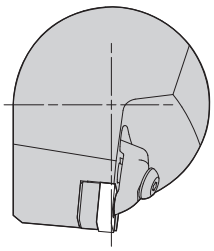

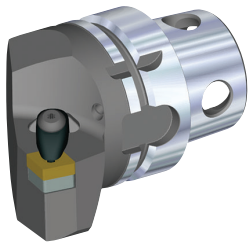

DCRN 75°

order number	catalog number	L1 mm	L1 in	F mm	F in	gage insert	kg	lbs
right hand								
5543409	**KM4X63DCRNR12KC04**	70	2.756	38	1.496	CN..120408/CN..432	1,41	3.10
left hand								
5543408	**KM4X63DCRNL12KC04**	70	2.756	38	1.496	CN..120408/CN..432	1,41	3.12

Spare Parts









catalog number	shim	shim screw	clamp assembly	pin
right hand				
KM4X63DCRNR12KC04	**ICSN443**	**KMSP415IP**	**CM234R ASSY**	**SSP025016M**
left hand				
KM4X63DCRNL12KC04	**ICSN443**	**KMSP415IP**	**CM234R ASSY**	**SSP025016M**

NOTE: KM4X™ coolant unit and wrench are available and must be ordered separately; see page B84.



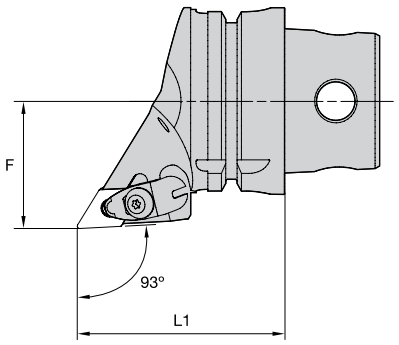

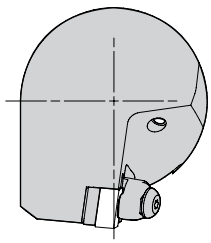



DDJN 93°

order number	catalog number	L1 mm	L1 in	F mm	F in	gage insert	kg	lbs
right hand								
5552678	**KM4X63DDJNR15KC04**	70	2.756	43	1.693	DN..150408/DN..432	1,19	2.63
5543451	**KM4X63DDJNR15KC06**	70	2.756	43	1.693	DN..150608/DN..442	1,16	2.57
left hand								
5552677	**KM4X63DDJNL15KC04**	70	2.756	43	1.693	DN..150408/DN..432	1,17	2.57
5543450	**KM4X63DDJNL15KC06**	70	2.756	43	1.693	DN..150608/DN..442	1,19	2.62

Spare Parts

catalog number	 shim	 shim screw	 clamp assembly	 pin
right hand				
KM4X63DDJNR15KC04	**IDSN443**	**KMSP415IP**	**CM234R ASSY**	**SSP025016M**
KM4X63DDJNR15KC06	**IDSN433**	**KMSP415IP**	**CM234R ASSY**	**SSP025016M**
left hand				
KM4X63DDJNL15KC04	**IDSN443**	**KMSP415IP**	**CM234R ASSY**	**SSP025016M**
KM4X63DDJNL15KC06	**IDSN433**	**KMSP415IP**	**CM234R ASSY**	**SSP025016M**

NOTE: KM4X™ coolant unit and wrench are available and must be ordered separately; see page B84.



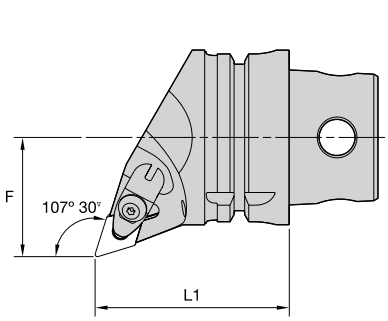

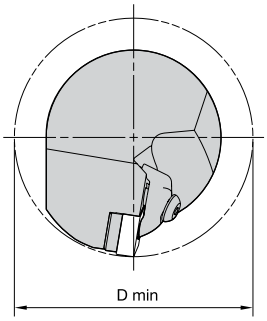



DDQN 107° 30'

		L1		F		D min				
order number	catalog number	mm	in	mm	in	mm	in	gage insert	kg	lbs
right hand										
5543453	**KM4X63DDQNR15KC04**	70	2.756	43	1.693	86	3.386	DN..150408/DN..432	1,29	2.85
5552710	**KM4X63DDQNR15KC06**	70	2.756	43	1.693	86	3.386	DN..150608/DN..442	1,29	2.85
left hand										
5552679	**KM4X63DDQNL15KC04**	70	2.756	43	1.693	86	3.386	DN..150408/DN..432	1,29	2.84
5543452	**KM4X63DDQNL15KC06**	70	2.756	43	1.693	86	3.386	DN..150608/DN..442	1,29	2.83

Spare Parts

				
catalog number	shim	shim screw	clamp assembly	pin
right hand				
KM4X63DDQNR15KC04	**IDSN443**	**KMSP415IP**	**CM234R ASSY**	**SSP025016M**
KM4X63DDQNR15KC06	**IDSN433**	**KMSP415IP**	**CM234R ASSY**	**SSP025016M**
left hand				
KM4X63DDQNL15KC04	**IDSN443**	**KMSP415IP**	**CM234R ASSY**	**SSP025016M**
KM4X63DDQNL15KC06	**IDSN433**	**KMSP415IP**	**CM234R ASSY**	**SSP025016M**

NOTE: KM4X™ coolant unit and wrench are available and must be ordered separately; see page B84.



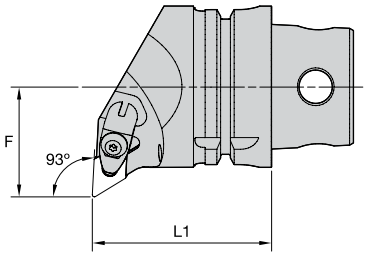

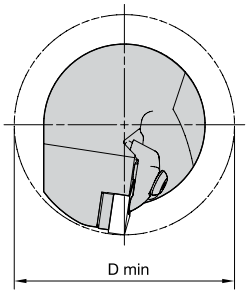



DDUN 93°

order number	catalog number	L1 mm	L1 in	F mm	F in	D min mm	D min in	gage insert	kg	lbs
right hand										
5552712	**KM4X63DDUNR15KC04**	70	2.756	43	1.693	86	3.386	DN..150408/DN..432	1,41	3.10
5543454	**KM4X63DDUNR15KC06**	70	2.756	43	1.693	86	3.386	DN..150608/DN..442	1,41	3.11
left hand										
5552711	**KM4X63DDUNL15KC04**	70	2.756	43	1.693	86	3.386	DN..150408/DN..432	1,40	3.09

Spare Parts

catalog number	 shim	 shim screw	 clamp assembly	 pin
right hand				
KM4X63DDUNR15KC04	**IDSN443**	**KMSP415IP**	**CM234R ASSY**	**SSP025016M**
KM4X63DDUNR15KC06	**IDSN433**	**KMSP415IP**	**CM234R ASSY**	**SSP025016M**
left hand				
KM4X63DDUNL15KC04	**IDSN443**	**KMSP415IP**	**CM234R ASSY**	**SSP025016M**

NOTE: KM4X™ coolant unit and wrench are available and must be ordered separately; see page B84.



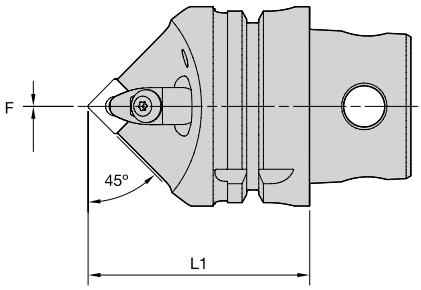

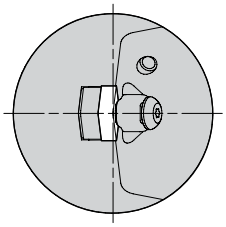



DSDN 45°

order number	catalog number	L1 mm	L1 in	F mm	F in	gage insert	kg	lbs
5552713	**KM4X63DSDNN12KC04**	70	2.756	0	.000	SN..120408/SN..432	1,22	2.68

Spare Parts

catalog number	 shim	 shim screw	 clamp assembly	 pin
KM4X63DSDNN12KC04	**ISSN443**	**KMSP415IP**	**CM234R ASSY**	**SSP025016M**

NOTE: KM4X™ coolant unit and wrench are available and must be ordered separately; see page B84.

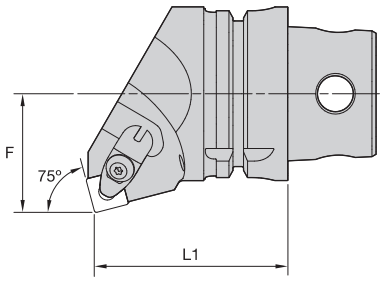

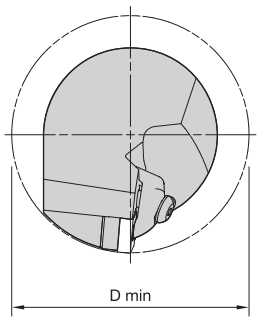

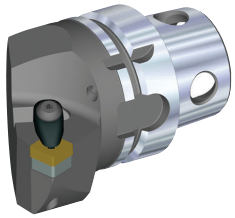

DSKN 75°

order number	catalog number	L1 mm	L1 in	F mm	F in	D min mm	D min in	gage insert	kg	lbs
right hand										
5552715	**KM4X63DSKNR12KC04**	70	2.756	43	1.693	86	3.386	SN..120408/SN..432	1,47	3.24
left hand										
5552714	**KM4X63DSKNL12KC04**	70	2.756	43	1.693	86	3.386	SN..120408/SN..432	1,46	3.22

Spare Parts






catalog number	shim	shim screw	clamp assembly	pin
right hand				
KM4X63DSKNR12KC04	**ISSN443**	**KMSP415IP**	**CM234R ASSY**	**SSP025016M**
left hand				
KM4X63DSKNL12KC04	**ISSN443**	**KMSP415IP**	**CM234R ASSY**	**SSP025016M**

NOTE: KM4X™ coolant unit and wrench are available and must be ordered separately; see page B84.



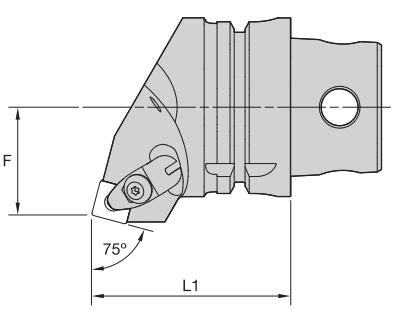

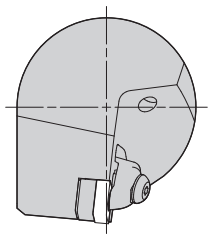

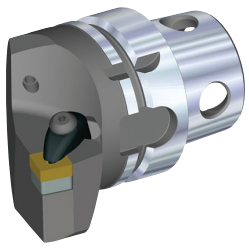

DSRN 75°

order number	catalog number	L1 mm	L1 in	F mm	F in	gage insert	kg	lbs
right hand								
5552717	**KM4X63DSRNR12KC04**	70	2.756	38	1.496	SN..120408/SN..432	1,37	3.01
left hand								
5552716	**KM4X63DSRNL12KC04**	70	2.756	38	1.496	SN..120408/SN..432	1,37	3.01

Spare Parts









catalog number	shim	shim screw	clamp assembly	pin
right hand				
KM4X63DSRNR12KC04	**ISSN443**	**KMSP415IP**	**CM234R ASSY**	**SSP025016M**
left hand				
KM4X63DSRNL12KC04	**ISSN443**	**KMSP415IP**	**CM234R ASSY**	**SSP025016M**

NOTE: KM4X™ coolant unit and wrench are available and must be ordered separately; see page B84.

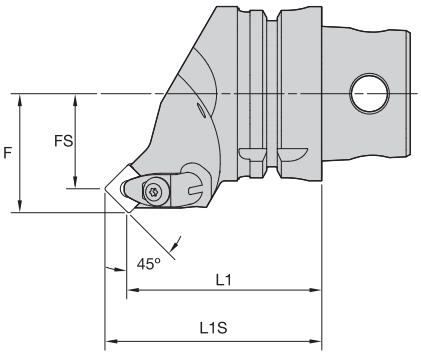

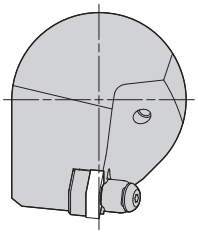

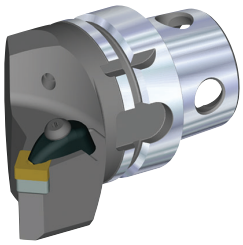

DSSN 45°

order number	catalog number	L1 mm	L1 in	L1S mm	L1S in	F mm	F in	FS mm	FS in	gage insert	kg	lbs
right hand												
5552719	**KM4X63DSSNR12KC04**	70	2.756	78,3	3.084	43	1.693	35	1.37	SN..120408/SN..432	1,41	3.10
left hand												
5552718	**KM4X63DSSNL12KC04**	70	2.756	78,3	3.084	43	1.693	35	1.37	SN..120408/SN..432	1,41	3.11

Spare Parts






catalog number	shim	shim screw	clamp assembly	pin
right hand				
KM4X63DSSNR12KC04	**ISSN443**	**KMSP415IP**	**CM234R ASSY**	**SSP025016M**
left hand				
KM4X63DSSNL12KC04	**ISSN443**	**KMSP415IP**	**CM234R ASSY**	**SSP025016M**

NOTE: KM4X™ coolant unit and wrench are available and must be ordered separately; see page B84.



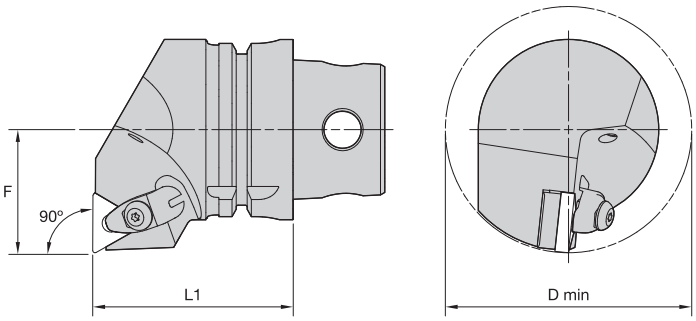

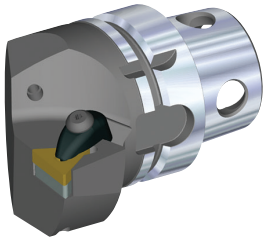

DTFN 90°

order number	catalog number	L1 mm	L1 in	F mm	F in	D min mm	D min in	gage insert	kg	lbs
right hand										
5552721	**KM4X63DTFNR22KC04**	70	2.756	43	1.693	86	3.386	TN..220408/TN..432	1,52	3.35
left hand										
5552720	**KM4X63DTFNL22KC04**	70	2.756	43	1.693	86	3.386	TN..220408/TN..432	1,53	3.36

Spare Parts

catalog number	 shim	 shim screw	 clamp assembly	 pin
right hand				
KM4X63DTFNR22KC04	**ITSN433**	**KMSP415IP**	**CM234R ASSY**	**SSP025016M**
left hand				
KM4X63DTFNL22KC04	**ITSN433**	**KMSP415IP**	**CM234R ASSY**	**SSP025016M**

NOTE: KM4X™ coolant unit and wrench are available and must be ordered separately; see page B84.



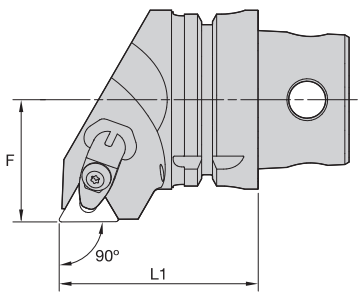

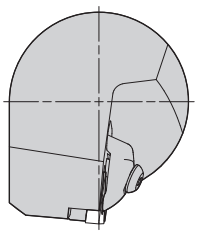

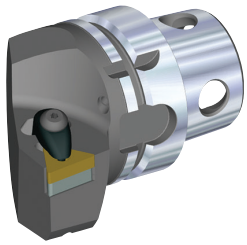

DTGN 90°

order number	catalog number	L1 mm	L1 in	F mm	F in	gage insert	kg	lbs
right hand								
5552723	**KM4X63DTGNR22KC04**	70	2.756	43	1.693	TN..220408/TN..432	1,39	3.06
left hand								
5552722	**KM4X63DTGNL22KC04**	70	2.756	43	1.693	TN..220408/TN..432	1,39	3.06

Spare Parts









catalog number	shim	shim screw	clamp assembly	pin
right hand				
KM4X63DTGNR22KC04	**ITSN433**	**KMSP415IP**	**CM234R ASSY**	**SSP025016M**
left hand				
KM4X63DTGNL22KC04	**ITSN433**	**KMSP415IP**	**CM234R ASSY**	**SSP025016M**

NOTE: KM4X™ coolant unit and wrench are available and must be ordered separately; see page B84.



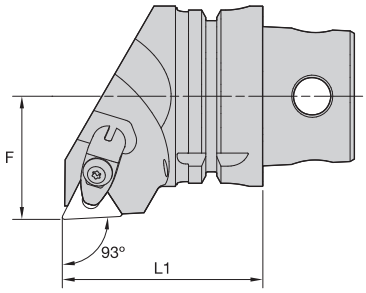

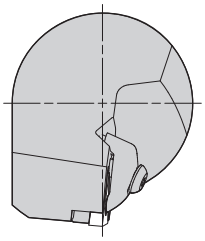

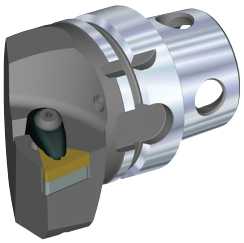

DTJN 93°

order number	catalog number	L1 mm	L1 in	F mm	F in	gage insert	kg	lbs
right hand								
5552725	**KM4X63DTJNR22KC04**	70	2.756	43	1.693	TN..220408/TN..432	1,39	3.06
left hand								
5552724	**KM4X63DTJNL22KC04**	70	2.756	43	1.693	TN..220408/TN..432	1,39	3.06

Spare Parts

catalog number	 shim	 shim screw	 clamp assembly	 pin
right hand				
KM4X63DTJNR22KC04	**ITSN433**	**KMSP415IP**	**CM234R ASSY**	**SSP025016M**
left hand				
KM4X63DTJNL22KC04	**ITSN433**	**KMSP415IP**	**CM234R ASSY**	**SSP025016M**

NOTE: KM4X™ coolant unit and wrench are available and must be ordered separately; see page B84.



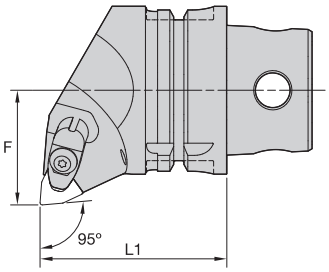

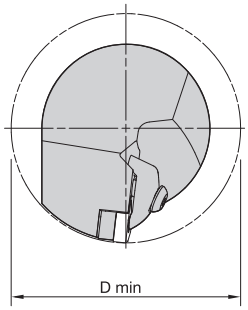

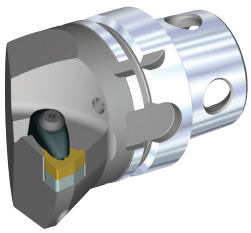

DWLN 95°

order number	catalog number	L1 mm	L1 in	F mm	F in	D min mm	D min in	gage insert	kg	lbs
right hand										
5552726	**KM4X63DWLNR08KC04**	70	2.756	43	1.69	86	3.386	WN..080408/WN..432	1,45	3.20
left hand										
5543455	**KM4X63DWLNL08KC04**	70	2.756	43	1.69	86	3.386	WN..080408/WN..432	1,46	3.22

Spare Parts






catalog number	shim	shim screw	clamp assembly	pin
right hand				
KM4X63DWLNR08KC04	**IWSN443**	**KMSP415IP**	**CM234R ASSY**	**SSP025016M**
left hand				
KM4X63DWLNL08KC04	**IWSN443**	**KMSP415IP**	**CM234R ASSY**	**SSP025016M**

NOTE: KM4X™ coolant unit and wrench are available and must be ordered separately; see page B84.



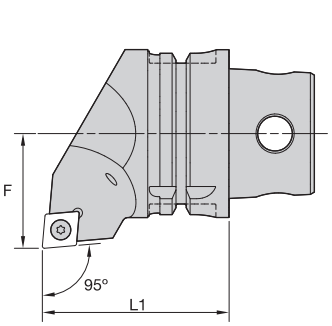

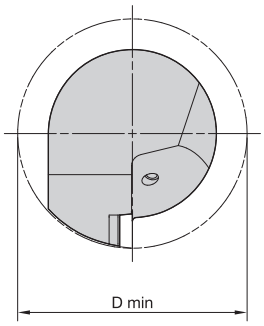

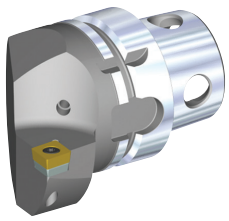

SCLC 95°



order number	catalog number	L1 mm	L1 in	F mm	F in	D min mm	D min in	gage insert	insert screw	shim	shim screw	kg	lbs
right hand													
5552437	**KM4X63SCLCR12**	70	2.756	43	1.693	86	3.386	CC..120408/CC..432	**MS1158**	**SKCP453**	**SRS4**	1,40	3.09
left hand													
5552435	**KM4X63SCLCL12**	70	2.756	43	1.693	86	3.386	CC..120408/CC..432	**MS1158**	**SKCP453**	**SRS4**	1,40	3.09

NOTE: KM4X™ coolant unit and wrench are available and must be ordered separately; see page B84.



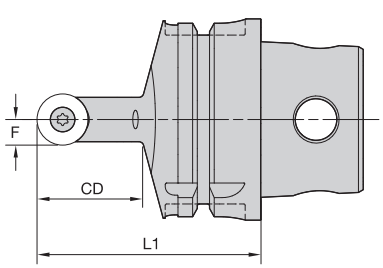

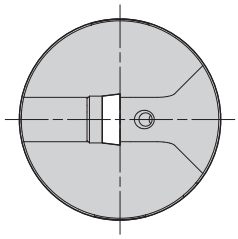

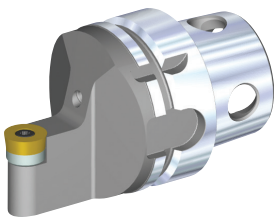

SRDC 0°



order number	catalog number	L1 mm	L1 in	F mm	F in	CD mm	CD in	gage insert	shim	shim screw	kg	lbs
5552441	**KM4X63SRDCN16**	70	2.756	8	.315	33	1.299	RC..1605M0	**SKRN160400**	**SRS5**	1,01	2.23

NOTE: KM4X™ coolant unit and wrench are available and must be ordered separately; see page B84.



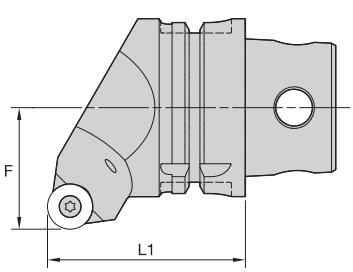

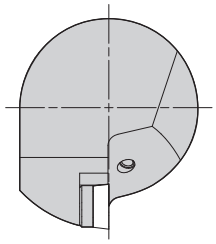

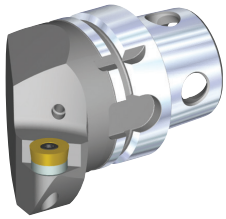

SRGC 0°





order number	catalog number	L1 mm	L1 in	F mm	F in	gage insert	shim	shim screw	kg	lbs
right hand										
5552445	**KM4X63SRGCR16**	70	2.756	43	1.693	RC..1605M0	**SKRN160400**	**SRS5**	1,40	3.08
left hand										
5552443	**KM4X63SRGCL16**	70	2.756	43	1.693	RC..1605M0	**SKRN160400**	**SRS5**	1,40	3.08

NOTE: KM4X™ coolant unit and wrench are available and must be ordered separately; see page B84.



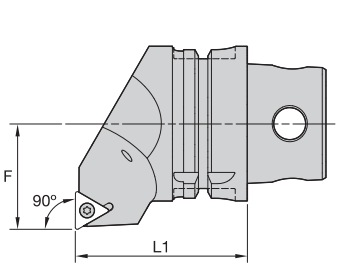

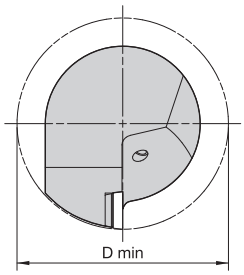

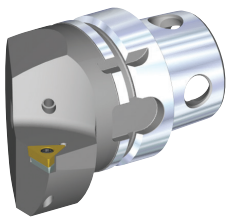

STFC 90°







order number	catalog number	L1 mm	L1 in	F mm	F in	D min mm	D min in	gage insert	insert screw	shim	shim screw	kg	lbs
right hand													
5552407	**KM4X63STFCR16**	70	2.756	43	1.693	86	3.386	TC..16T308/TC..3252	**MS1156**	**SKTP343**	**SRS3**	1,43	3.15
left hand													
5552405	**KM4X63STFCL16**	70	2.756	43	1.693	86	3.386	TC..16T308/TC..3252	**MS1156**	**SKTP343**	**SRS3**	1,43	3.15

NOTE: KM4X™ coolant unit and wrench are available and must be ordered separately; see page B84.



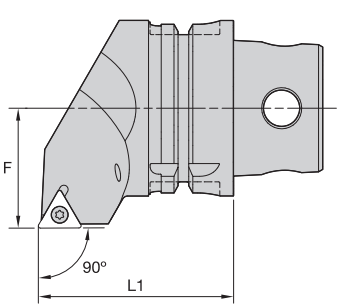

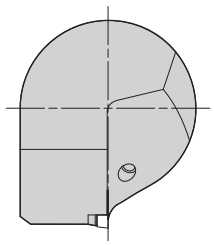

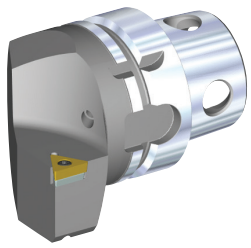

STGC 90°



order number	catalog number	L1 mm	L1 in	F mm	F in	gage insert	insert screw	shim	shim screw	kg	lbs
right hand											
5552431	**KM4X63STGCR16**	70	2.756	43	1.693	TC..16T308/TC..3252	**MS1156**	**SKTP343**	**SRS3**	1,44	3.17
left hand											
5552409	**KM4X63STGCL16**	70	2.756	43	1.693	TC..16T308/TC..3252	**MS1156**	**SKTP343**	**SRS3**	1,44	3.17

NOTE: KM4X™ coolant unit and wrench are available and must be ordered separately; see page B84.



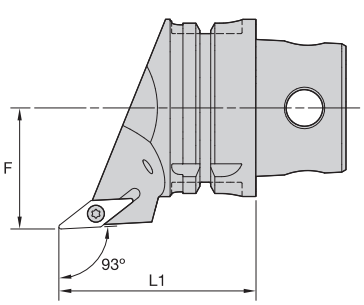

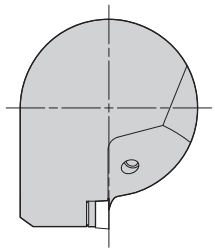

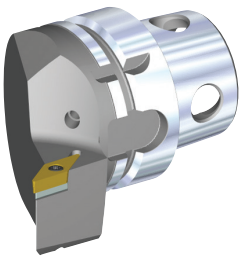

SVJB 93°

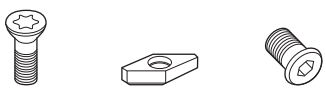

order number	catalog number	L1 mm	L1 in	F mm	F in	gage insert	insert screw	shim	shim screw	kg	lbs
right hand											
5552439	**KM4X63SVJBR16**	70	2.756	43	1.693	VB..160408/VB..332	**MS1156**	**SKVN343**	**SRS3**	1,18	2.62
left hand											
5552433	**KM4X63SVJBL16**	70	2.756	43	1.693	VB..160408/VB..332	**MS1156**	**SKVN343**	**SRS3**	1,18	2.61

NOTE: KM4X™ coolant unit and wrench are available and must be ordered separately; see page B84.

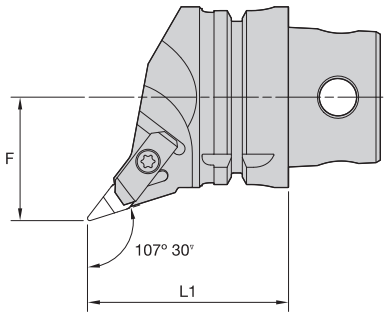

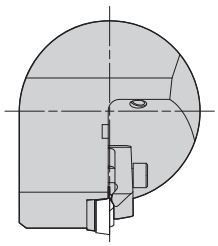

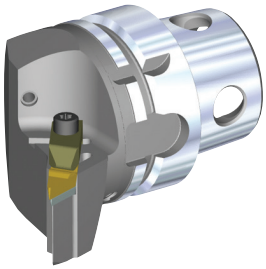

NVHC 107° 30'

order number	catalog number	L1 mm	L1 in	F mm	F in	gage insert	kg	lbs
right hand								
5577819	**KM4X63NVHCR16**	70	2.756	43	1.693	VCGR160408/VPGR332	1,24	2.73
left hand								
5577818	**KM4X63NVHCL16**	70	2.756	43	1.693	VCGR160408/VPGR332	1,24	2.73

Spare Parts






catalog number	shim	shim screw	clamp	clamp screw
right hand				
KM4X63NVHCR16	**SM812**	**MS959**	**CM113**	**MS1489**
left hand				
KM4X63NVHCL16	**SM812**	**MS959**	**CM114**	**MS1489**

NOTE: KM4X™ coolant unit and wrench are available and must be ordered separately; see page B84.



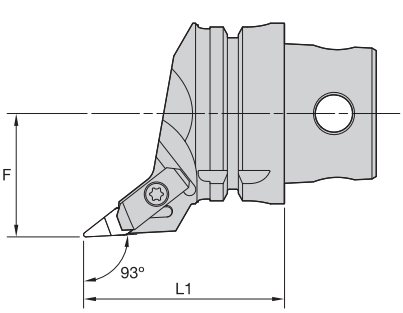

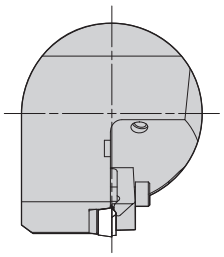

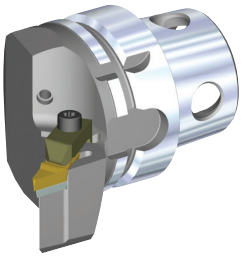

NVJC 93°

order number	catalog number	L1 mm	L1 in	F mm	F in	gage insert	kg	lbs
right hand								
5577821	**KM4X63NVJCR16**	70	2.756	43	1.693	VCGR160408/VPGR332	1,12	2.47
left hand								
5577820	**KM4X63NVJCL16**	70	2.756	43	1.693	VCGR160408/VPGR332	1,12	2.47

Spare Parts









catalog number	shim	shim screw	clamp	clamp screw
right hand				
KM4X63NVJCR16	**SM812**	**MS959**	**CM113**	**MS1489**
left hand				
KM4X63NVJCL16	**SM812**	**MS959**	**CM114**	**MS1489**

NOTE: KM4X™ coolant unit and wrench are available and must be ordered separately; see page B84.

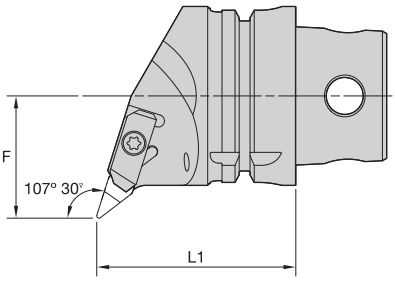

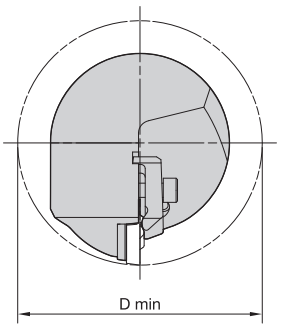

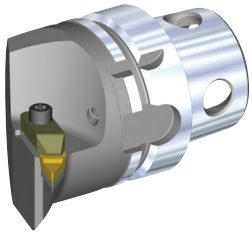

NVQC 107°30'

order number	catalog number	L1 mm	L1 in	F mm	F in	D min mm	D min in	gage insert	kg	lbs
right hand										
5577823	**KM4X63NVQCR16**	70	2.756	43	1.693	86	3.386	VCGR160408/VPGR332	1,30	2.87
left hand										
5577822	**KM4X63NVQCL16**	70	2.756	43	1.693	86	3.386	VCGR160408/VPGR332	1,30	2.87

Spare Parts






catalog number	shim	shim screw	clamp	clamp screw
right hand				
KM4X63NVQCR16	**SM812**	**MS959**	**CM113**	**MS1489**
left hand				
KM4X63NVQCL16	**SM812**	**MS959**	**CM114**	**MS1489**

NOTE: KM4X™ coolant unit and wrench are available and must be ordered separately; see page B84.



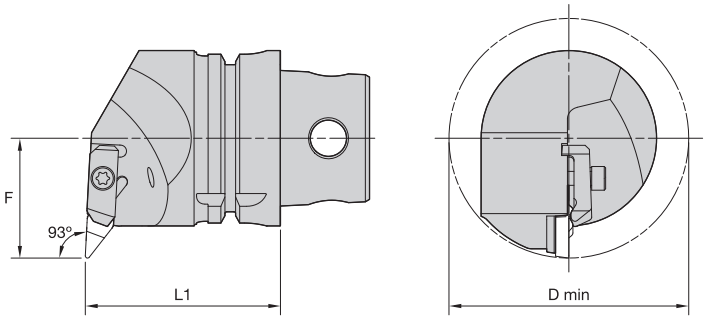

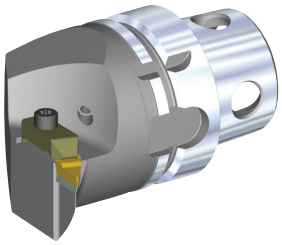

NVUC 93°

order number	catalog number	L1 mm	L1 in	F mm	F in	D min mm	D min in	gage insert	kg	lbs
right hand										
5577825	**KM4X63NVUCR16**	70	2.756	43	1.693	86	3.386	VCGR160408/VPGR332	1,48	3.26
left hand										
5577824	**KM4X63NVUCL16**	70	2.756	43	1.693	86	3.386	VCGR160408/VPGR332	1,48	3.27

Spare Parts






catalog number	shim	shim screw	clamp	clamp screw
right hand				
KM4X63NVUCR16	**SM812**	**MS959**	**CM113**	**MS1489**
left hand				
KM4X63NVUCL16	**SM812**	**MS959**	**CM114**	**MS1489**

NOTE: KM4X™ coolant unit and wrench are available and must be ordered separately; see page B84.

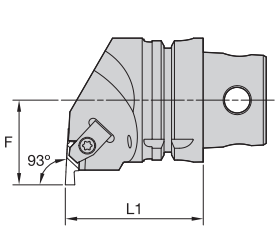

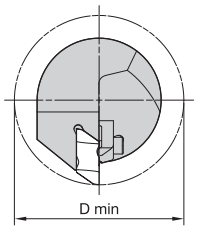

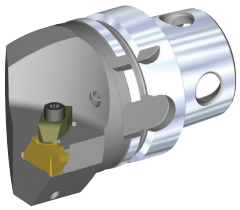

NE 93°





order number	catalog number	L1 mm	L1 in	F mm	F in	D min mm	D min in	gage insert	clamp	clamp screw	kg	lbs
right hand												
5577811	**KM4X63NER3**	70	2.756	43	1.693	86	3.386	NG3L	**CM73**	**MS1489**	1,39	3.07
5577812	**KM4X63NER4**	70	2.756	43	1.693	86	3.386	NG4L	**CM73**	**MS1489**	1,42	3.12
5577813	**KM4X63NER5**	70	2.756	43	1.693	86	3.386	NG5L	**CM81**	**MS1490**	1,40	3.09
left hand												
5577688	**KM4X63NEL3**	70	2.756	43	1.693	86	3.386	NG3R	**CM-72**	**MS1489**	1,39	3.07
5577689	**KM4X63NEL4**	70	2.756	43	1.693	86	3.386	NG4R	**CM-72**	**MS1489**	1,42	3.12
5577810	**KM4X63NEL5**	70	2.756	43	1.693	86	3.386	NG5R	**CM80**	**MS1490**	1,42	3.14

NOTE: KM4X™ coolant unit and wrench are available and must be ordered separately; see page B84.



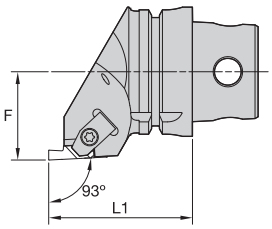

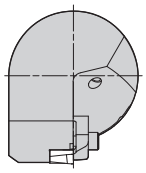

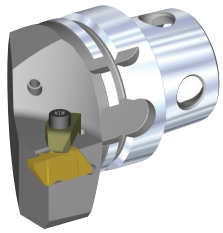

NS 93°





order number	catalog number	L1 mm	L1 in	F mm	F in	gage insert	clamp	clamp screw	kg	lbs
right hand										
5577816	**KM4X63NSR3**	70	2.756	43	1.693	NG3R	**CM-72**	**MS1489**	1,21	2.67
5577817	**KM4X63NSR4**	70	2.756	43	1.693	NG4R	**CM-72**	**MS1489**	1,25	2.75
left hand										
5577814	**KM4X63NSL3**	70	2.756	43	1.693	NG3L	**CM73**	**MS1489**	1,21	2.67
5577815	**KM4X63NSL4**	70	2.756	43	1.693	NG4L	**CM73**	**MS1489**	1,25	2.75

NOTE: KM4X™ coolant unit and wrench are available and must be ordered separately; see page B84.



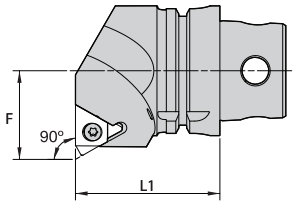

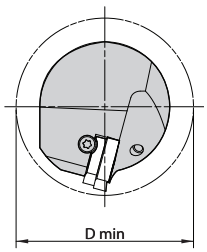

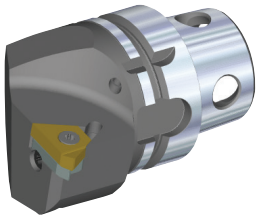

LSE-N 90° • Internal Only

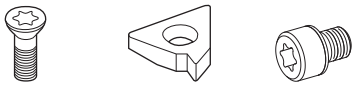

		L1		F		D min							
order number	catalog number	mm	in	mm	in	mm	in	gage insert	insert screw	shim	shim screw	kg	lbs
right hand													
5578530	**KM4X63LSER16N**	70	2.756	43	1.693	86	3.386	LT16NR	**SSA3T**	**SMYI3**	**SSY3T**	1,53	3.37
5578531	**KM4X63LSER22N**	70	2.756	43	1.693	86	3.386	LT22NR	**SSA4T**	**SMYI4**	**SSY4T**	1,51	3.33
5543562	**KM4X63LSER27N**	70	2.756	43	1.693	86	3.386	LT27NR	**SSA5T**	**SMYI5**	**SSY5T**	1,56	3.43
left hand													
5578518	**KM4X63LSEL16N**	70	2.756	43	1.693	86	3.386	LT16NL	**SSA3T**	**SMYE3**	**SSY3T**	1,53	3.36
5543561	**KM4X63LSEL22N**	70	2.756	43	1.693	86	3.386	LT22NL	**SSA4T**	**SMYE4**	**SSY4T**	1,51	3.32
5578519	**KM4X63LSEL27N**	70	2.756	43	1.693	86	3.386	LT27NL	**SSA5T**	**SMYE5**	**SSY5T**	1,58	3.48

NOTE: KM4X™ coolant unit and wrench are available and must be ordered separately; see page B84.



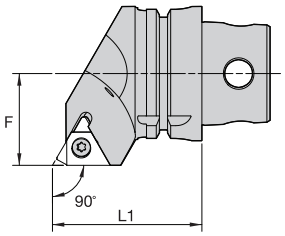

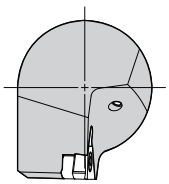

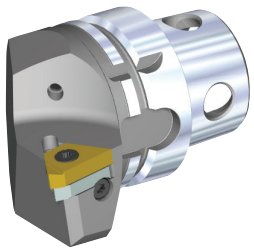

LSS 90°







order number	catalog number	L1 mm	L1 in	F mm	F in	gage insert	insert screw	shim	shim screw	kg	lbs
right hand											
5578536	**KM4X63LSSR16**	70	2.756	43	1.693	LT16ER	**SSA3T**	**SMYE3**	**SSY3T**	1,43	3.14
5543563	**KM4X63LSSR22**	70	2.756	43	1.693	LT22ER	**SSA4T**	**SMYE4**	**SSY4T**	1,39	3.06
5543564	**KM4X63LSSR27**	70	2.756	43	1.693	LT27ER	**SSA5T**	**SMYE5**	**SSY5T**	1,38	3.05
left hand											
5578532	**KM4X63LSSL16**	70	2.756	43	1.693	LT16EL	**SSA3T**	**SMYI3**	**SSY3T**	1,43	3.14
5578533	**KM4X63LSSL22**	70	2.756	43	1.693	LT22EL	**SSA4T**	**SMYI4**	**SSY4T**	1,39	3.07
5578535	**KM4X63LSSL27**	70	2.756	43	1.693	LT27EL	**SSA5T**	**SMYI5**	**SSY5T**	1,38	3.05

NOTE: KM4X™ coolant unit and wrench are available and must be ordered separately; see page B84.



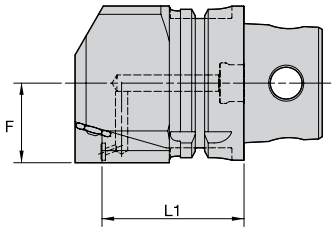

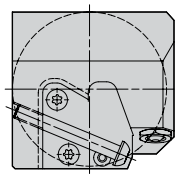



KGME • End Mount • 50C

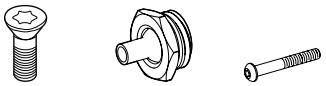

order number	catalog number	L1 mm	L1 in	F mm	F in	cartridge size	blade screw	nozzle	clamp screw	kg	lbs
right hand											
6000404	**KM4X63KGMER50C**	58,0	2.283	32,5	1.280	50	**MS1162**	**PMT04525**	**MS2002**	1,85	4.08
left hand											
6000405	**KM4X63KGMEL50C**	58,0	2.283	32,5	1.280	50	**MS1162**	**PMT04525**	**MS2002**	1,85	4.08

NOTE: Right-hand holder uses left-hand blades.
M50 blade and clamp screw torque equals 71–88 in. lbs. (8–10 Nm).
KKM4X™ coolant unit and wrench are available and must be ordered separately; see page B84.



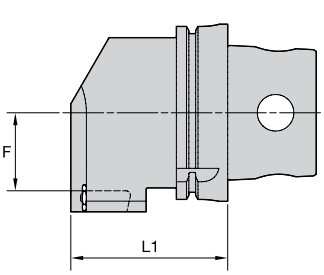

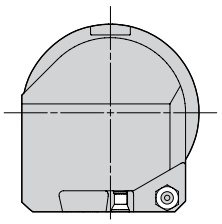



KGMS • Side Mount • 50C

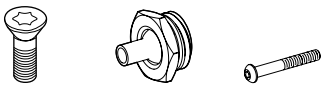

order number	catalog number	L1 mm	L1 in	F mm	F in	cartridge size	blade screw	nozzle	clamp screw	kg	lbs
right hand											
6000407	**KM4X63KGMSR50C**	73,5	2.894	31,0	1.220	50	**MS1162**	**PMT04525**	**MS2002**	1,86	4.11
left hand											
6000408	**KM4X63KGMSL50C**	73,5	2.894	31,0	1.220	50	**MS1162**	**PMT04525**	**MS2002**	1,86	4.11

NOTE: Right-hand holder uses right-hand blades.
M50 blade and clamp screw torque equals 71–88 in. lbs. (8–10 Nm).
KM4X™ coolant unit and wrench are available and must be ordered separately; see page B84.



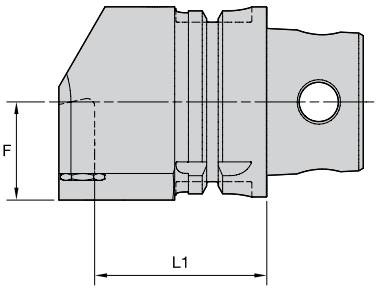

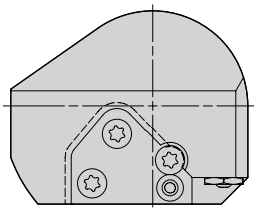



KGME • End Mount • 65C





order number	catalog number	L1 mm	L1 in	F mm	F in	cartridge size	blade screw	nozzle	kg	lbs
right hand										
5543555	**KM4X63KGMER65C**	57,0	2.244	32,5	1.280	65	**MS1163**	**PMT04525**	1,87	4.13
left hand										
5543553	**KM4X63KGMEL65C**	57,0	2.244	32,5	1.280	65	**MS1163**	**PMT04525**	1,87	4.13

NOTE: Right-hand holder uses left-hand blades.
M65 blade and clamp screw torque equals 159–177 in. lbs. (18–20 Nm).
KM4X™ coolant unit and wrench are available and must be ordered separately; see page B84.



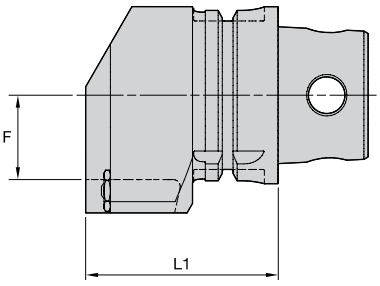

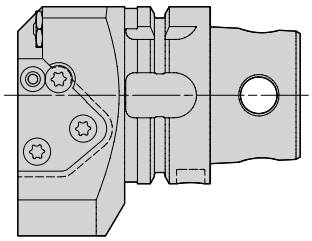



KGMS • Side Mount • 65C





order number	catalog number	L1 mm	L1 in	F mm	F in	cartridge size	blade screw	nozzle	kg	lbs
right hand										
5543560	**KM4X63KGMSR65C**	68,5	2.697	30,0	1.181	65	**MS1163**	**PMT04525**	2,04	4.49
left hand										
5543558	**KM4X63KGMSL65C**	68,5	2.697	30,0	1.181	65	**MS1163**	**PMT04525**	2,04	4.49

NOTE: Right-hand cutting units use right-hand blades.
KM4X™ coolant unit and wrench are available and must be ordered separately; see page B84.
M65 blade and clamp screw torque equals 159–177 in. lbs. (18–20 Nm).



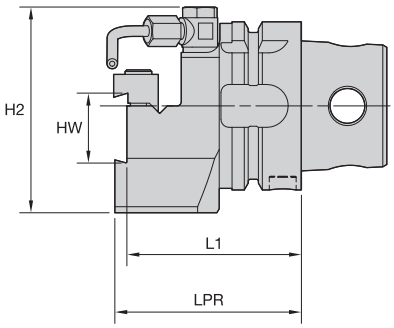

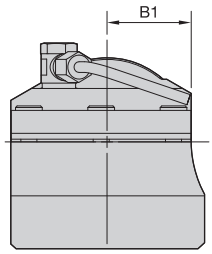

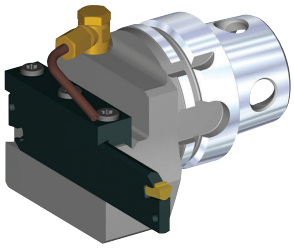

BE • End Mount

order number	catalog number	L1 mm	L1 in	LPR mm	LPR in	H2 mm	H2 in	HW mm	HW in	B1 mm	B1 in	cartridge size	cartridge 1	kg	lbs
right hand															
5578513	**KM4X63BER4**	65,3	2.571	69,8	2.748	77	3.03	26	1.024	31,5	1.240	26	A2BN..26...	1,87	4.13
left hand															
5578512	**KM4X63BEL4**	65,3	2.571	69,8	2.748	77	3.03	26	1.024	31,5	1.240	26	A2BN..26...	1,87	4.13

Spare Parts









catalog number	clamp	clamp screw	coolant tube	coolant swivel base
right hand				
KM4X63BER4	**CGS4**	**MS1595**	**12649910900**	**12649910800**
left hand				
KM4X63BEL4	**CGS4**	**MS1595**	**12649910900**	**12649910800**

NOTE: KM4X™ coolant unit and wrench are available and must be ordered separately; see page B84.



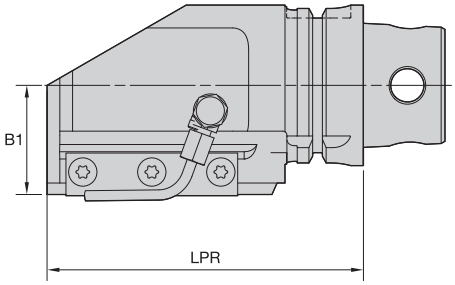

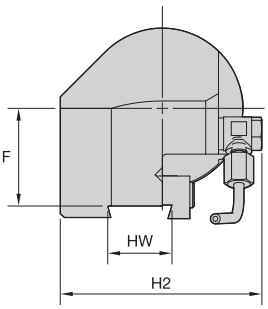

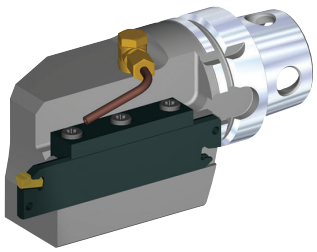

BS • Side Mount

order number	catalog number	LPR mm	LPR in	H2 mm	H2 in	HW mm	HW in	B1 mm	B1 in	F mm	F in	cartridge size	cartridge 1	kg	lbs
right hand															
5578516	**KM4X63BSR4**	124,0	4.882	79	3.11	26	1.024	42,8	1.685	38,30	1.508	26	A2BN..26...	3,19	7.04
5578517	**KM4X63BSR5**	144,6	5.691	84	3.31	32	1.260	42,8	1.685	37,30	1.469	32	A2BN..32...	3,92	8.64
left hand															
5578514	**KM4X63BSL4**	124,0	4.882	79	3.11	26	1.024	42,8	1.685	38,30	1.508	26	A2BN..26...	3,19	7.04
5578515	**KM4X63BSL5**	144,6	5.691	84	3.31	32	1.260	42,8	1.685	37,30	1.469	32	A2BN..32...	3,92	8.64

Spare Parts






catalog number	clamp	clamp screw	coolant tube	coolant swivel base
right hand				
KM4X63BSR4	**CGS4**	**MS1595**	**12649910900**	**12649910800**
KM4X63BSR5	**CGS5**	**MS1595**	**12649910900**	**12649910800**
left hand				
KM4X63BSL4	**CGS4**	**MS1595**	**12649910900**	**12649910800**
KM4X63BSL5	**CGS5**	**MS1595**	**12649910900**	**12649910800**

NOTE: KM4X™ coolant unit and wrench are available and must be ordered separately; see page B84.

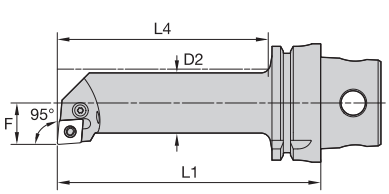

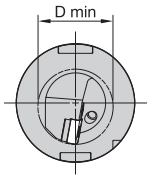

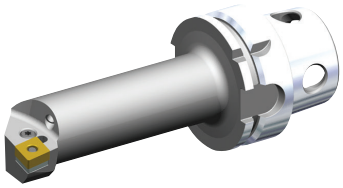

PCLN 95°

order number	catalog number	D2 mm	D2 in	D min mm	D min in	F mm	F in	L4 mm	L4 in	L1 mm	L1 in	gage insert	kg	lbs
right hand														
5589481	**KM4X63S25KPCLNR12**	25	.98	32	1.260	17	.669	88	3.48	125	4.921	CN..120408/CN..432	1,11	2.45
5589463	**KM4X63S32LPCLNR12**	32	1.26	40	1.575	22	.866	112	4.42	140	5.512	CN..120408/CN..432	1,36	3.00
5589475	**KM4X63S40LPCLNR12**	40	1.58	50	1.969	27	1.063	114	4.49	140	5.512	CN..120408/CN..432	1,72	3.79
5589469	**KM4X63S50PPCLNR12**	50	1.97	63	2.480	35	1.378	144	5.67	170	6.693	CN..120408/CN..432	2,68	5.91
left hand														
5589480	**KM4X63S25KPCLNL12**	25	.98	32	1.260	17	.669	88	3.48	125	4.921	CN..120408/CN..432	1,11	2.44
5589462	**KM4X63S32LPCLNL12**	32	1.26	40	1.575	22	.866	112	4.42	140	5.512	CN..120408/CN..432	1,11	2.44
5589474	**KM4X63S40LPCLNL12**	40	1.58	50	1.969	27	1.063	114	4.49	140	5.512	CN..120408/CN..432	1,72	3.79
5589468	**KM4X63S50PPCLNL12**	50	1.97	63	2.480	35	1.378	144	5.67	170	6.693	CN..120408/CN..432	2,68	5.91

Spare Parts







catalog number	shim	lever screw	shim pin	toggle lever	punch
right hand					
KM4X63S25KPCLNR12	–	**514.122**	–	**511.022**	–
KM4X63S32LPCLNR12	**512.112**	**514.123**	**513.023**	**511.023**	**515.018**
KM4X63S40LPCLNR12	**512.112**	**514.123**	**513.023**	**511.023**	**515.018**
KM4X63S50PPCLNR12	**512.112**	**514.123**	**513.023**	**511.023**	**515.018**
left hand					
KM4X63S25KPCLNL12	–	**514.122**	–	**511.022**	–
KM4X63S32LPCLNL12	**512.112**	**514.123**	**513.023**	**511.023**	**515.018**
KM4X63S40LPCLNL12	**512.112**	**514.123**	**513.023**	**511.023**	**515.018**
KM4X63S50PPCLNL12	**512.112**	**514.123**	**513.023**	**511.023**	**515.018**

NOTE: KM4X™ coolant unit and wrench are available and must be ordered separately; see page B84.



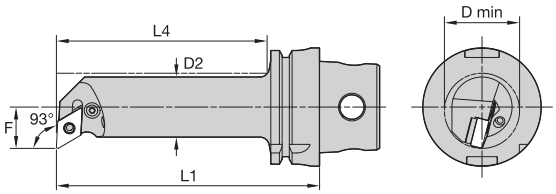

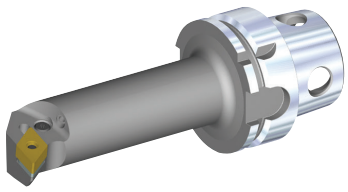

PDUN 93°

order number	catalog number	D2 mm	D2 in	D min mm	D min in	F mm	F in	L4 mm	L4 in	L1 mm	L1 in	gage insert	kg	lbs
right hand														
5589483	**KM4X63S25KPDUNR11**	25	.98	32	1.260	17	.669	88	3.48	125	4.921	DN..110408/DN..332	1,11	2.45
5589465	**KM4X63S32LPDUNR15**	32	1.26	40	1.575	22	.866	112	4.42	140	5.512	DN..150608/DN..442	1,35	2.97
5589477	**KM4X63S40LPDUNR15**	40	1.58	50	1.969	27	1.063	114	4.49	140	5.512	DN..150608/DN..442	1,70	3.75
5589471	**KM4X63S50PPDUNR15**	50	1.97	63	2.480	35	1.378	144	5.67	170	6.693	DN..150608/DN..442	2,71	5.96
left hand														
5589482	**KM4X63S25KPDUNL11**	25	.98	32	1.260	17	.669	88	3.48	125	4.921	DN..110408/DN..332	1,11	2.45
5589464	**KM4X63S32LPDUNL15**	32	1.26	40	1.575	22	.866	112	4.42	140	5.512	DN..150608/DN..442	1,35	2.97
5589476	**KM4X63S40LPDUNL15**	40	1.58	50	1.969	27	1.063	114	4.49	140	5.512	DN..150608/DN..442	1,70	3.76
5589470	**KM4X63S50PPDUNL15**	50	1.97	63	2.480	35	1.378	144	5.67	170	6.693	DN..150608/DN..442	2,71	5.97

Spare Parts

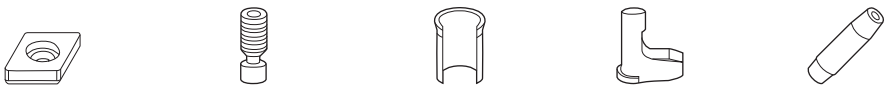

catalog number	shim	lever screw	shim pin	toggle lever	punch
right hand					
KM4X63S25KPDUNR11	–	514.112	–	511.015	–
KM4X63S32LPDUNR15	512.153	514.128	513.023	511.024	515.018
KM4X63S40LPDUNR15	512.153	514.128	513.023	511.024	515.018
KM4X63S50PPDUNR15	512.153	514.128	513.023	511.024	515.018
left hand					
KM4X63S25KPDUNL11	–	514.112	–	511.015	–
KM4X63S32LPDUNL15	512.153	514.128	513.023	511.024	515.018
KM4X63S40LPDUNL15	512.153	514.128	513.023	511.024	515.018
KM4X63S50PPDUNL15	512.153	514.128	513.023	511.024	515.018

NOTE: KM4X™ coolant unit and wrench are available and must be ordered separately; see page B84.



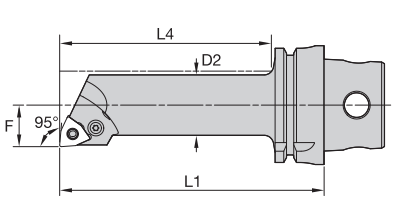

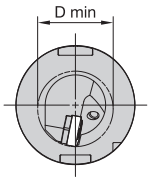

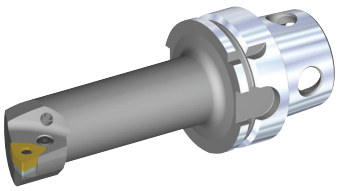

PWLN 95°

order number	catalog number	D2 mm	D2 in	D min mm	D min in	F mm	F in	L4 mm	L4 in	L1 mm	L1 in	gage insert	kg	lbs
right hand														
5589485	**KM4X63S25KPWLNR08**	25	.98	32	1.260	17	.669	88	3.48	125	4.921	WN..080408/WN..432	1,11	2.45
5589467	**KM4X63S32LPWLNR08**	32	1.26	40	1.575	22	.866	112	4.42	140	5.512	WN..080408/WN..432	1,34	2.95
5589479	**KM4X63S40LPWLNR08**	40	1.58	50	1.969	27	1.063	114	4.49	140	5.512	WN..080408/WN..432	1,69	3.74
5589473	**KM4X63S50PPWLNR08**	50	1.97	63	2.480	35	1.378	144	5.67	170	6.693	WN..080408/WN..432	2,63	5.81
left hand														
5589484	**KM4X63S25KPWLNL08**	25	.98	32	1.260	17	.669	88	3.48	125	4.921	WN..080408/WN..432	1,11	2.45
5589466	**KM4X63S32LPWLNL08**	32	1.26	40	1.575	22	.866	112	4.42	140	5.512	WN..080408/WN..432	1,34	2.95
5589478	**KM4X63S40LPWLNL08**	40	1.58	50	1.969	27	1.063	114	4.49	140	5.512	WN..080408/WN..432	1,69	3.74
5589472	**KM4X63S50PPWLNL08**	50	1.97	63	2.480	35	1.378	144	5.67	170	6.693	WN..080408/WN..432	2,64	5.81

Spare Parts







catalog number	shim	lever screw	shim pin	toggle lever	punch
right hand					
KM4X63S25KPWLNR08	–	**514.122**	–	**511.022**	–
KM4X63S32LPWLNR08	**512.135**	**514.123**	**513.023**	**511.023**	**515.018**
KM4X63S40LPWLNR08	**512.135**	**514.123**	**513.023**	**511.023**	**515.018**
KM4X63S50PPWLNR08	**512.135**	**514.123**	**513.023**	**511.023**	**515.018**
left hand					
KM4X63S25KPWLNL08	–	**514.122**	–	**511.022**	–
KM4X63S32LPWLNL08	**512.135**	**514.123**	**513.023**	**511.023**	**515.018**
KM4X63S40LPWLNL08	**512.135**	**514.123**	**513.023**	**511.023**	**515.018**
KM4X63S50PPWLNL08	**512.135**	**514.123**	**513.023**	**511.023**	**515.018**

NOTE: KM4X™ coolant unit and wrench are available and must be ordered separately; see page B84.



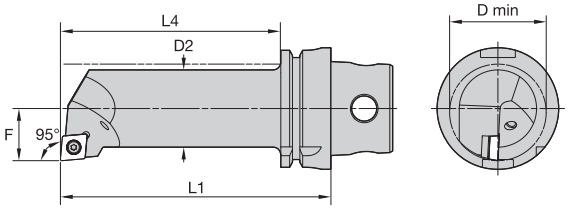

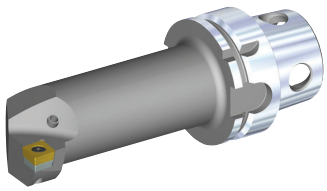

SCLC 95°

order number	catalog number	D2 mm	D2 in	D min mm	D min in	F mm	F in	L4 mm	L4 in	L1 mm	L1 in	gage insert	kg	lbs
right hand														
5637824	**KM4X63S40LSCLCR12**	40	1.575	50	1.969	27	1.063	114	4.49	140	5.512	CC..120408/CC..432	1,72	3.80
left hand														
5637823	**KM4X63S40LSCLCL12**	40	1.575	50	1.969	27	1.063	114	4.49	140	5.512	CC..120408/CC..432	1,72	3.80

Spare Parts

catalog number	 insert screw	 shim	 shim screw
right hand			
KM4X63S40LSCLCR12	**MS1158**	**SKCP453**	**SRS4**
left hand			
KM4X63S40LSCLCL12	**MS1158**	**SKCP453**	**SRS4**

NOTE: KM4X™ coolant unit and wrench are available and must be ordered separately; see page B84.



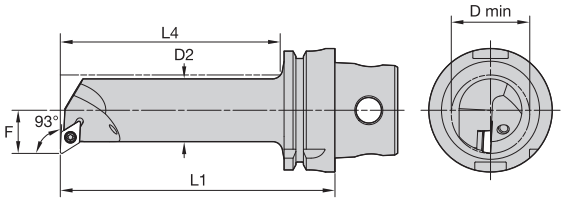

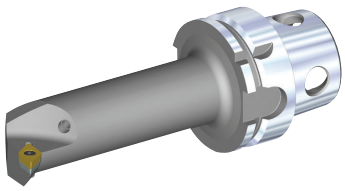

SDUC 93°

order number	catalog number	D2 mm	D2 in	D min mm	D min in	F mm	F in	L4 mm	L4 in	L1 mm	L1 in	gage insert	kg	lbs
right hand														
5637822	**KM4X63S32LSDUCR11**	32	1.260	40	1.575	22	.866	112	4.42	140	5.512	DC..11T308/DC..3252	1,36	3.00
left hand														
5637821	**KM4X63S32LSDUCL11**	32	1.260	40	1.575	22	.866	112	4.42	140	5.512	DC..11T308/DC..3252	1,36	3.00

Spare Parts

catalog number	insert screw	shim	shim screw
right hand			
KM4X63S32LSDUCR11	**MS1156**	**SKDP343**	**SRS3**
left hand			
KM4X63S32LSDUCL11	**MS1156**	**SKDP343**	**SRS3**

NOTE: KM4X™ coolant unit and wrench are available and must be ordered separately; see page B84.



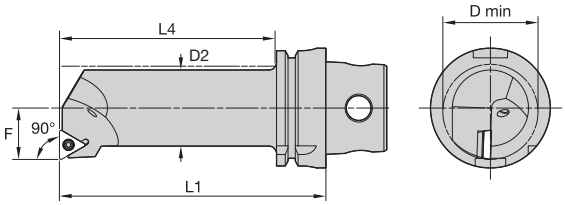

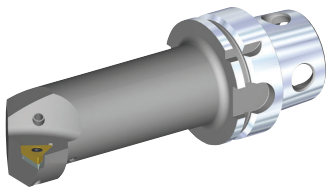

STFC 90°

order number	catalog number	D2 mm	D2 in	D min mm	D min in	F mm	F in	L4 mm	L4 in	L1 mm	L1 in	gage insert	kg	lbs
right hand														
5637826	KM4X63S40LSTFCR16	40	1.575	50	1.969	27	1.063	114	4.49	140	5.512	TC..16T308/TC..3252	1,73	3.82
left hand														
5637825	KM4X63S40LSTFCL16	40	1.575	50	1.969	27	1.063	114	4.49	140	5.512	TC..16T308/TC..3252	1,73	3.82

Spare Parts

catalog number	insert screw	shim	shim screw
right hand			
KM4X63S40LSTFCR16	MS1156	SKTP343	SRS3
left hand			
KM4X63S40LSTFCL16	MS1156	SKTP343	SRS3

NOTE: KM4X™ coolant unit and wrench are available and must be ordered separately; see page B84.



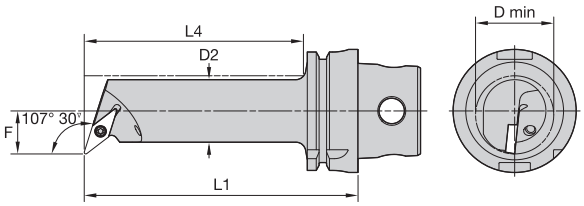

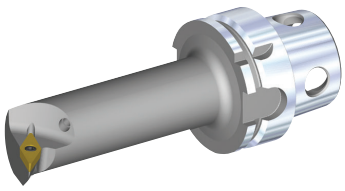

SVQB 107° 30'

order number	catalog number	D2 mm	D2 in	D min mm	D min in	F mm	F in	L4 mm	L4 in	L1 mm	L1 in	gage insert	kg	lbs
right hand														
5637828	**KM4X63S32LSVQBR16**	32	1.260	40	1.575	22	.866	112	4.42	140	5.512	VB..160408	1,35	2.97
left hand														
5637827	**KM4X63S32LSVQBL16**	32	1.260	40	1.575	22	.866	112	4.42	140	5.512	VB..160408	1,35	2.97

Spare Parts



catalog number	insert screw
right hand	
KM4X63S32LSVQBR16	**MS1155**
left hand	
KM4X63S32LSVQBL16	**MS1155**

NOTE: KM4X™ coolant unit and wrench are available and must be ordered separately; see page B84.



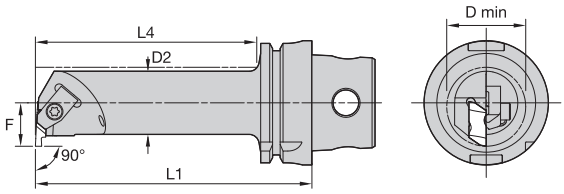

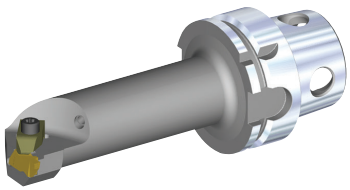

NE 90°

order number	catalog number	D2 mm	D2 in	D min mm	D min in	F mm	F in	L4 mm	L4 in	L1 mm	L1 in	gage insert	kg	lbs
right hand														
5639129	**KM4X63S32LNER3**	32	1.260	40	1.575	22	.866	112	4.42	140	5.512	NG3L	1,35	2.98
left hand														
5639128	**KM4X63S32LNEL3**	32	1.260	40	1.575	22	.866	112	4.42	140	5.512	NG3R	1,35	2.98

Spare Parts





catalog number	clamp	clamp screw
right hand		
KM4X63S32LNER3	**CM73**	**MS1489**
left hand		
KM4X63S32LNEL3	**CM-72**	**MS1489**

NOTE: KM4X™ coolant unit and wrench are available and must be ordered separately; see page B84.

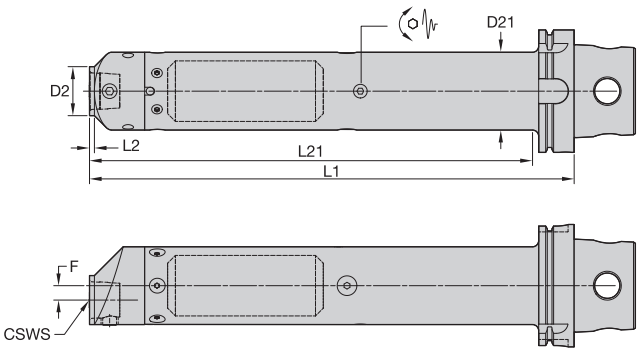





TTB Tunable Bar

order number	catalog number	CSWS system size	D2 mm	D2 in	D21 mm	D21 in	F mm	F in	L1 mm	L1 in	L2 mm	L2 in	L21 mm	L21 in	Nm	ft. lbs.	spare parts package
5639334	**KM4X63D40TTB20KM40**	KM40	40,00	1.575	63,50	2.500	11,75	.463	513,92	20.233	4,00	.157	513,92	20.233	12-16	9-12	**KM40PKG3S**
5639333	**KM4X63D40TTB15KM40**	KM40	40,00	1.575	63,50	2.500	11,75	.463	386,92	15.233	4,00	.157	386,92	15.233	12-16	9-12	**KM40PKG3S**
5521089	**KM4X63D32TTB12KM40**	KM40	40,00	1.575	50,80	2.000	5,00	.197	310,71	12.233	4,00	.157	284,76	11.211	12-16	9-12	**KM40PKG3S**
5639332	**KM4X63D28TTB14KM40**	KM40	40,00	1.575	44,45	1.750	0,00	.000	361,52	14.233	4,00	.157	335,57	13.211	12-16	9-12	**KM40PKG3S**
5639331	**KM4X63D24TTB9KM40**	KM40	40,00	1.575	38,10	1.500	0,00	.000	234,55	9.234	205,60	8.095	—	—	12-16	9-12	**KM40PKG3S**

NOTE: KM4X™ coolant unit and wrench are available and must be ordered separately; see page B84.



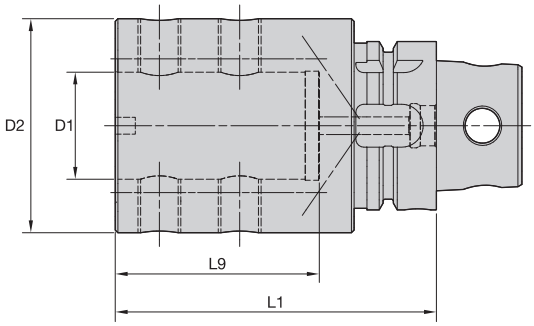

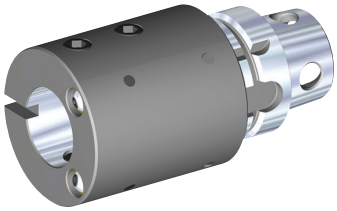

BA Metric



order number	catalog number	D1	D2	L1	L9	clamp screw	nozzle	wrench size clamp screw	Nm	kg
5543412	**KM4X63BA40120M**	40	80	120	76	**MS1947**	**SB09530PWZ1012**	8 mm	125	3,51

BA Inch



order number	catalog number	D1	D2	L1	L9	clamp screw	nozzle	wrench size clamp screw	ft. lbs.	lbs
5543411	**KM4X63BA150472**	1 1/2	3.15	4.724	2.99	**MS1947**	**SB09530PWZ1012**	8 mm	90	7.89

NOTE: Do not over tighten clamp screw; use torque recommendations above.
Supplied with clamp screw.
Clamp screw wrench not included.
For boring bar reducers, reference Innovations Master Catalog Tooling Systems 2013 A-12-02809, page A570.
KM4X™ coolant unit and wrench are available and must be ordered separately; see page B84.

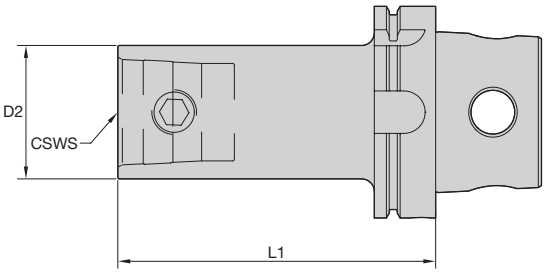

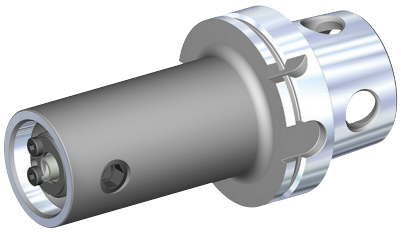

KM™ Reducer

order number	catalog number	CSWS system size	D2 mm	D2 in	L1 mm	L1 in	wrench size actuation screw	actuation screw torque (Nm)	actuation screw torque (ft. lbs.)	spare parts package	kg	lbs
5552338	**KM4X63KM40065M**	KM40	40	1.575	65	2.559	6 mm	12-16	9-12	**KM40PKG3S**	1,02	2.24
6273053	**KM4X63KM40120M**	KM40	40	1.575	120	4.724	6 mm	12-16	9-12	**KM40PKG3S**	1,54	3.40
5552334	**KM4X63KM50080M**	KM50	50	1.969	80	3.150	10 mm	27-34	20-25	**KM50PKG3S**	1,34	2.96
6273051	**KM4X63KM50150M**	KM50	50	1.969	150	5.906	10 mm	27-34	20-25	**KM50PKG3S**	2,40	5.30
5552336	**KM4X63KM63100M**	KM63	63	2.480	100	3.937	12 mm	47-54	35-40	**KM63PKG3S**	1,98	4.36
6273057	**KM4X63KM2520075M**	KM2520	25	.984	75	2.953	5 mm	19-22	14-16	**KM2520NRPKG**	0,88	1.94
6273055	**KM4X63KM3225100M**	KM3225	32	1.260	100	3.937	6 mm	12-16	9-12	**KM3225NRPKG**	1,12	2.48

NOTE: KM4X™ coolant unit and wrench are available and must be ordered separately; see page B84.



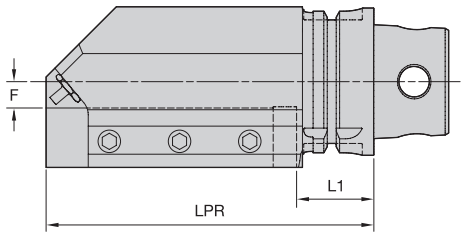

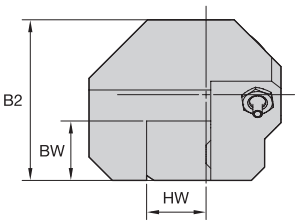

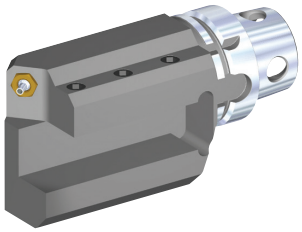

STAR/L • Metric





order number	catalog number	B2	BW	F	HW	L1	LPR	nozzle	cup point socket set screw	Nm	kg
right hand											
5638011	**KM4X63STAR2525M**	68	25	11	25	35	140	**PMT04526**	**MS1950**	55	4,04
left hand											
5638010	**KM4X63STAL2525M**	68	25	11	25	35	140	**PMT04526**	**MS1950**	55	4,04

STAR/L • Inch





order number	catalog number	B2	BW	F	HW	L1	LPR	nozzle	cup point socket set screw	ft. lbs.	lbs
right hand											
5638012	**KM4X63STAR16**	2.683	1.000	.443	1.000	1.299	5.512	**PMT04526**	**MS1950**	40	8.92
left hand											
5638013	**KM4X63STAL16**	2.683	1.000	.443	1.000	1.299	5.512	**PMT04526**	**MS1950**	40	8.91

NOTE: Right-handed cutting units use right-handed tools.
KM4X™ coolant unit and wrench are available and must be ordered separately; see page B84.



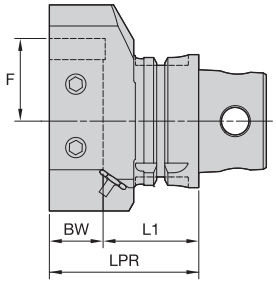

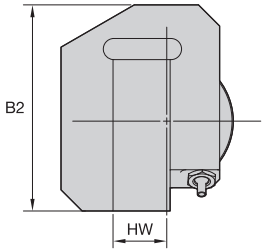

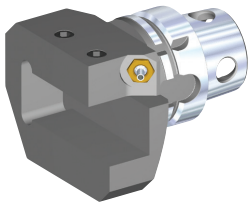

ETAR/L • Metric





order number	catalog number	B2	BW	F	HW	L1	LPR	nozzle	cup point socket set screw	Nm	kg
right hand											
5637957	**KM4X63ETAR2525M**	98	25	-38	25	45	70	**PMT04526**	**MS1950**	6,20	2,25
left hand											
5637956	**KM4X63ETAL2525M**	98	25	-38	25	45	70	**PMT04526**	**MS1950**	6,20	2,25

ETAR/L • Inch





order number	catalog number	B2	BW	F	HW	L1	LPR	nozzle	cup point socket set screw	in. lbs.	lbs
right hand											
5637958	**KM4X63ETAR16**	3.839	1.000	-1.539	1.000	1.781	2.781	**PMT04526**	**MS1950**	55	5.00
left hand											
5637959	**KM4X63ETAL16**	3.839	1.000	-1.539	1.000	1.781	2.781	**PMT04526**	**MS1950**	55	5.00

NOTE: Right-handed cutting units use left-handed tools.
KM4X™ coolant unit and wrench are available and must be ordered separately; see page B84.

NOVO KNOWS SEARCH

Searching for a tool by using the outdated method of a catalog has been replaced with the Advise and Select functions from NOVO™ — saving you time and money.

ADVISE

Uses a rules-based approach to provide cutting tool recommendations:

- Define Machining Feature (face milling, slotting, blind hole, etc.)
- Apply Constraint Requirements (geometric, material, tolerance, etc.)
- Set Machining Sequence (single or multi-step operations, rough then finish, etc.)
- Receive Ranked Results

SELECT

A method of selecting cutting tools from a tree structure via a hierarchy or parametric search:

- If you know which product you are looking for, a quick search can be performed by just the catalog number or product description.
- Smart filters significantly reduce the amount of potential tooling solutions.
- After the tool is selected, NOVO also provides cutting and adaptive item options that fit with your solution.

NOVO can ensure you have the right tools on your machines, in the right sequence. Resulting in flawless execution that accelerates every job, and maximizes every shift. **kennametal.com/novo**

- 30–50% higher clamping torque compared to GP line.
- Balanceable — fine tune with optional M6 set screws.
- Suitable for carbide only, designated by groove in front face.
- 10 kW power or greater Shrink Fit device must be used.

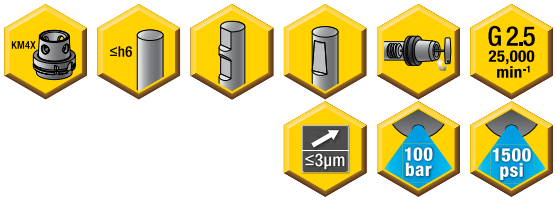

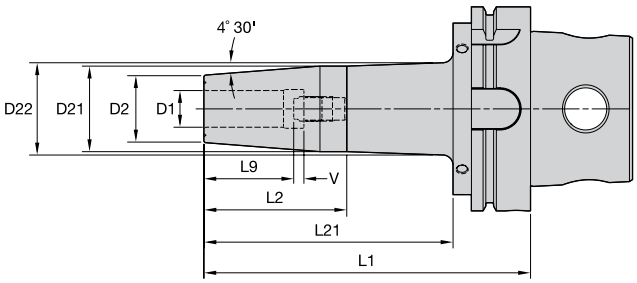



Cutting Tool Shank Requirements

metric (ISO standard)

cutting tool shank diameter	tolerance	
12, 14, 16, & 18	h6	0,000/-0,011
20 & 25	h6	0,000/-0,013
32, 40, & 50	h6	0,000/-0,016

HPV TT HT • Metric



order number	catalog number	D1	D2	D21	D22	L1	L2	L9	L21	V	stop screw	wrench size stop screw	kg
5552363	KM4X63HPVTTHT03080M	3	9	15	—	80	45	14	—	10	TTSS05014M	2.5 mm	0,90
5552364	KM4X63HPVTTHT04080M	4	9	15	—	80	45	15	—	10	TTSS05014M	2.5 mm	0,90
5552365	KM4X63HPVTTHT05080M	5	9	15	—	80	45	15	—	10	TTSS06014M	3 mm	0,89
5552366	KM4X63HPVTTHT06080M	6	21	27	—	80	54	26	—	10	TTSS05014M	2.5 mm	0,92
5552367	KM4X63HPVTTHT06120M	6	21	27	—	120	85	26	—	10	TTSS05014M	2.5 mm	1,19
5552368	KM4X63HPVTTHT06160M	6	21	27	1	160	50	26	125	10	TTSS05014M	2.5 mm	1,42
5552369	KM4X63HPVTTHT08080M	8	21	27	—	80	54	26	—	10	TTSS06014M	3 mm	0,91
5552380	KM4X63HPVTTHT08120M	8	21	27	—	120	85	26	—	10	TTSS06014M	3 mm	1,18
5552381	KM4X63HPVTTHT08160M	8	21	27	1	160	50	26	125	10	TTSS06014M	3 mm	1,42
5552382	KM4X63HPVTTHT10085M	10	24	31	—	85	59	31	—	10	TTSS08014M	4 mm	0,99
5552383	KM4X63HPVTTHT10120M	10	24	32	—	120	85	31	—	10	TTSS08014M	4 mm	1,29
5552384	KM4X63HPVTTHT10160M	10	24	32	1	160	63	31	125	10	TTSS08014M	4 mm	1,58
5552385	KM4X63HPVTTHT12090M	12	24	32	—	90	64	36	—	10	TTSS10014M	5 mm	1,00
5552386	KM4X63HPVTTHT12120M	12	24	32	—	120	85	36	—	10	TTSS10014M	5 mm	1,27
5552387	KM4X63HPVTTHT12160M	12	24	32	1	160	63	36	125	10	TTSS10014M	5 mm	1,57
5552388	KM4X63HPVTTHT14090M	14	27	34	—	90	64	36	—	10	TTSS10014M	5 mm	1,05
5552389	KM4X63HPVTTHT14120M	14	27	34	—	120	85	36	—	10	TTSS10014M	5 mm	1,34
5552390	KM4X63HPVTTHT14160M	14	27	34	2	160	57	36	125	10	TTSS10014M	5 mm	1,68
5552391	KM4X63HPVTTHT16095M	16	27	34	—	95	69	39	—	10	TTSS12014M	6 mm	1,06
5552392	KM4X63HPVTTHT16120M	16	27	34	—	120	85	39	—	10	TTSS12014M	6 mm	1,31

(continued)

(HPV TT HT • Metric — continued)



order number	catalog number	D1	D2	D21	D22	L1	L2	L9	L21	V	stop screw	wrench size stop screw	kg
5552393	**KM4X63HPVTTHT16160M**	16	27	34	2	160	57	39	125	10	**TTSS12014M**	6 mm	1,66
5552394	**KM4X63HPVTTHT18095M**	18	33	42	—	95	69	39	—	10	**TTSS12014M**	6 mm	1,23
5552395	**KM4X63HPVTTHT18120M**	18	33	42	—	120	85	39	—	10	**TTSS12014M**	6 mm	1,54
5552396	**KM4X63HPVTTHT18160M**	18	33	42	2	160	69	39	125	10	**TTSS12014M**	6 mm	2,02
5552397	**KM4X63HPVTTHT20100M**	20	33	42	—	100	74	41	—	10	**TTSS16014M**	8 mm	1,25
5552398	**KM4X63HPVTTHT20120M**	20	33	42	—	120	85	41	—	10	**TTSS16014M**	8 mm	1,51
5552399	**KM4X63HPVTTHT20160M**	20	33	42	2	160	69	41	125	10	**TTSS16014M**	8 mm	1,98
5552400	**KM4X63HPVTTHT25115M**	25	44	53	—	115	89	47	—	10	**TTSS16014M**	8 mm	1,83
5552401	**KM4X63HPVTTHT25160M**	25	44	53	—	160	134	47	—	10	**TTSS16014M**	8 mm	2,58
5552402	**KM4X63HPVTTHT32120M**	32	44	53	—	120	94	51	—	10	**TTSS16014M**	8 mm	1,75
5552403	**KM4X63HPVTTHT32160M**	32	44	53	—	160	134	51	—	10	**TTSS16014M**	8 mm	2,42

NOTE: Do not overheat. Overheating will destroy the accuracy and functionality of the toolholder.
Supplied with stop screw.
Optional M6~1.0P x 5 lg fine-balancing screw set (10 pieces) available. Order number: MS1276PKG. Must be ordered separately.
For Shrink Fit Toolholder technical information, reference the Kennametal Innovations Master Catalog Tooling Systems 2013 (A-12-02809); page M78.
Adjusting stop screw gage, reference the Kennametal Innovations Master Catalog Tooling Systems 2013 (A-12-02809); page M81.
Shrink Fit accessories, reference the Kennametal Innovations Master Catalog Tooling Systems 2013 (A-12-02809); page L12-L13.
KM4X™ coolant unit and wrench are available and must be ordered separately; see page B84.

- 30–50% higher clamping torque compared to GP line.
- Balanceable — fine tune with optional M6 set screws.
- Suitable for carbide only, designated by groove in front face.
- 10 kW power or greater Shrink Fit device must be used.

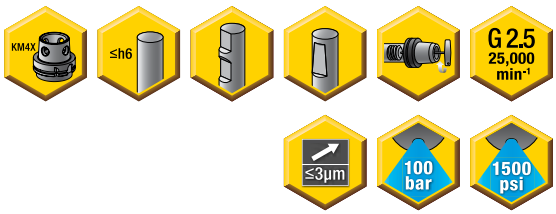

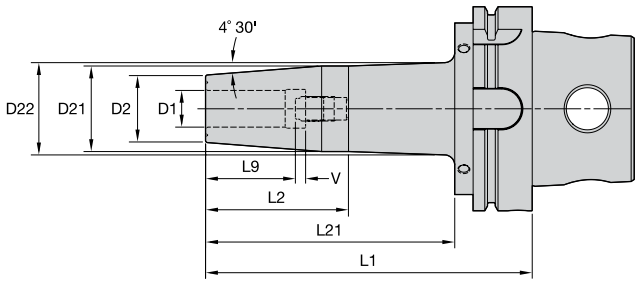



Cutting Tool Shank Requirements

inch (industry standard)

cutting tool shank diameter	tolerance
1/2 & 5/8	.0000/-.0004
3/4, 7/8, 1, 1-1/4, & 1-1/2	.0000/-.0005

HPV TT HT • Inch



order number	catalog number	D1	D2	D21	D22	L1	L2	L9	L21	V	stop screw	wrench size stop screw	lbs
5552330	KM4X63HPVTTHT025315	1/4	.83	1.06	—	3.150	2.128	1.02	—	.39	TTSS05014M	2.5 mm	2.01
5552331	KM4X63HPVTTHT025472	1/4	.83	1.06	—	4.724	3.348	1.02	—	.39	TTSS05014M	2.5 mm	2.61
5552333	KM4X63HPVTTHT025630	1/4	.83	1.06	1.27	6.299	1.970	1.02	4.92	.39	TTSS05014M	2.5 mm	3.14
5552335	KM4X63HPVTTHT031315	5/16	.83	1.06	—	3.150	2.128	1.02	—	.39	TTSS06014M	3 mm	2.00
5552337	KM4X63HPVTTHT031472	5/16	.83	1.06	—	4.724	3.348	1.02	—	.39	TTSS06014M	3 mm	2.60
5552339	KM4X63HPVTTHT031630	5/16	.83	1.06	1.27	6.299	1.970	1.02	4.92	.39	TTSS06014M	3 mm	3.12
5552341	KM4X63HPVTTHT038335	3/8	.95	1.24	—	3.347	2.325	1.22	—	.39	TTSS08014M	4 mm	2.17
5552343	KM4X63HPVTTHT038472	3/8	.95	1.26	—	4.724	3.348	1.22	—	.39	TTSS08014M	4 mm	2.84
5552345	KM4X63HPVTTHT038630	3/8	.95	1.26	1.43	6.299	2.480	1.22	4.92	.39	TTSS08014M	4 mm	3.49
5552346	KM4X63HPVTTHT044354	7/16	.95	1.26	—	3.543	2.522	1.42	—	.39	TTSS10014M	5 mm	2.21
5552347	KM4X63HPVTTHT044472	7/16	.95	1.26	—	4.724	3.348	1.42	—	.39	TTSS10014M	5 mm	2.81
5552348	KM4X63HPVTTHT050354	1/2	.95	1.26	—	3.543	2.522	1.42	—	.39	TTSS10014M	5 mm	2.18
5552349	KM4X63HPVTTHT050472	1/2	.95	1.26	—	4.724	3.348	1.42	—	.39	TTSS10014M	5 mm	2.79
5552350	KM4X63HPVTTHT050630	1/2	.95	1.26	1.43	6.299	2.480	1.42	4.92	.39	TTSS10014M	5 mm	3.44
5552351	KM4X63HPVTTHT056354	9/16	1.06	1.34	—	3.543	2.522	1.42	—	.39	TTSS10014M	5 mm	2.30
5552352	KM4X63HPVTTHT062374	5/8	1.06	1.34	—	3.740	2.719	1.54	—	.39	TTSS12014M	6 mm	2.33
5552353	KM4X63HPVTTHT062472	5/8	1.06	1.34	—	4.724	3.343	1.54	—	.39	TTSS12014M	6 mm	2.89
5552354	KM4X63HPVTTHT062630	5/8	1.06	1.34	1.52	6.299	2.240	1.54	4.92	.39	TTSS12014M	6 mm	3.65
5552355	KM4X63HPVTTHT075394	3/4	1.30	1.65	—	3.937	2.915	1.61	—	.39	TTSS16014M	8 mm	2.78
5552356	KM4X63HPVTTHT075630	3/4	1.30	1.65	1.80	6.299	2.720	1.61	4.92	.39	TTSS16014M	8 mm	4.40

(continued)

(HPV TT HT • Inch — continued)



order number	catalog number	D1	D2	D21	D22	L1	L2	L9	L21	V	stop screw	wrench size stop screw	lbs
5552357	**KM4X63HPVTTHT088394**	7/8	1.30	1.65	—	3.937	2.915	1.61	—	.39	**TTSS16014M**	8 mm	2.69
5552358	**KM4X63HPVTTHT088630**	7/8	1.30	1.65	1.80	6.299	2.720	1.61	4.92	.39	**TTSS16014M**	8 mm	4.31
5552359	**KM4X63HPVTTHT100453**	1	1.73	2.07	—	4.528	3.506	1.85	—	.39	**TTSS16014M**	8 mm	4.02
5552360	**KM4X63HPVTTHT100630**	1	1.73	2.07	—	6.299	5.278	1.85	—	.39	**TTSS16014M**	8 mm	5.67
5552361	**KM4X63HPVTTHT125472**	1 1/4	1.73	2.07	—	4.724	3.703	2.01	—	.39	**TTSS16014M**	8 mm	3.87
5552362	**KM4X63HPVTTHT125630**	1 1/4	1.73	2.07	—	6.299	5.278	2.01	—	.39	**TTSS16014M**	8 mm	5.34

NOTE: Do not overheat. Overheating will destroy the accuracy and functionality of the toolholder.
Supplied with stop screw.
Optional M6~1.0P x 5 lg fine-balancing screw set (10 pieces) available. Order number: MS1276PKG. Must be ordered separately.
For Shrink Fit Toolholder technical information, reference the Kennametal Innovations Master Catalog Tooling Systems 2013 (A-12-02809); page M78.
Adjusting stop screw gage, reference the Kennametal Innovations Master Catalog Tooling Systems 2013 (A-12-02809); page M81.
Shrink Fit accessories, reference the Kennametal Innovations Master Catalog Tooling Systems 2013 (A-12-02809); page L12-L13.
KM4X™ coolant unit and wrench are available and must be ordered separately; see page B84.



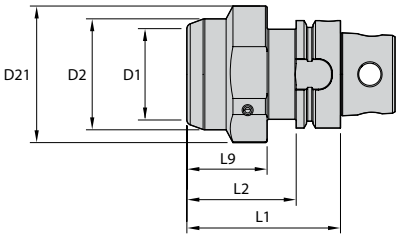



L9: minimum clamping length
V: maximum adjusting length

Cutting Tool Shank Requirements
metric (ISO standard)

cutting tool shank diameter	tolerance	
6	h6	0,000/-0,008
8 & 10	h6	0,000/-0,009
12, 14, 16, & 18	h6	0,000/-0,011
20	h6	0,000/-0,013

HCT HT • Metric



order number	catalog number	D1	D2	D21	L1	L2	L9	V	actuation wrench	wrench size actuation screw	wrench size stop screw	kg
5520990	**KM4X63HCTHT20090M**	20	52,5	–	90	64	41	10	**170.135**	5 mm	5 mm	1,63
6048253	**KM4X63HCTHT32090M**	32	65,0	80	90	23	51	10	**170.136**	6 mm	6 mm	2,05

NOTE: Do not over torque actuation screw. Tighten by hand until stop is felt.
Supplied with stop screw.
Actuation wrench must be ordered separately.
Reduction sleeves are available and must be ordered separately.
Safe-Lock™ sleeves are available and must be ordered seperately.
KM4X™ coolant unit and wrench are available and must be ordered separately; see page B84.



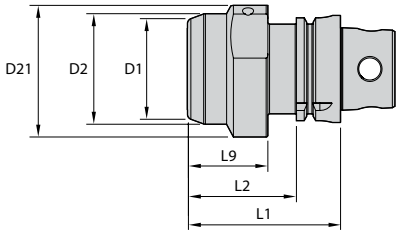

L9: minimum clamping length
V: maximum adjusting length



Cutting Tool Shank Requirements
inch (industry standard)

cutting tool shank diameter	tolerance
1/4, 5/16 & 3/8	.0000/-.0004
7/16, 1/2, 9/16, 5/8, & 11/16	.0000/-.0004
3/4, 7/8, 1, & 1-1/4	.0000/-.0005

HCT HT • Inch



order number	catalog number	D1	D2	D21	L1	L2	L9	V	actuation wrench	wrench size actuation screw	wrench size stop screw	lbs
5521071	**KM4X63HCTHT075350**	.750	2.067	—	3.500	2.478	1.618	.394	**170.135**	5 mm	5 mm	3.57
6048254	**KM4X63HCTHT125354**	1.250	2.559	3.150	3.543	.906	2.008	.394	**170.136**	6 mm	6 mm	4.53

NOTE: Do not over torque actuation screw. Tighten by hand until stop is felt.
Supplied with stop screw.
Actuation wrench must be ordered separately.
Reduction sleeves are available and must be ordered separately.
Safe-Lock™ sleeves are available and must be ordered separately.
KM4X™ coolant unit and wrench are available and must be ordered separately; see page B84.



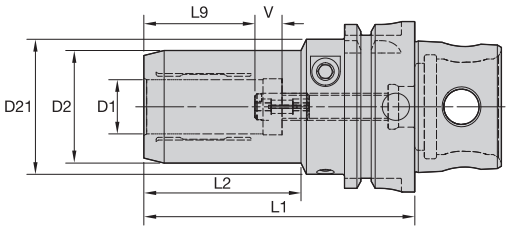

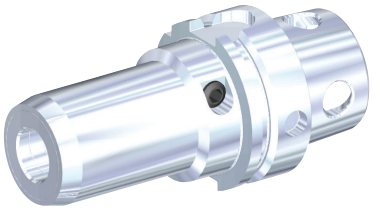

L9: minimum clamping length
V: maximum adjusting length

HC Trend Line • Metric

order number	catalog number	D1	D2	D21	L1	L2	L9	V	actuation wrench	wrench size actuation screw	length adjustment wrench	wrench size stop screw	kg
5479916	**KM4X63HCT06080M**	6	26	50	80	33	27	10	**170.135**	5 mm	**170.003**	3 mm	1,10
5552286	**KM4X63HCT06150M**	6	26	50	150	105	27	10	**170.135**	5 mm	**170.003**	3 mm	1,35
5552287	**KM4X63HCT08080M**	8	28	50	80	34	27	10	**170.135**	5 mm	**170.003**	3 mm	1,11
5552288	**KM4X63HCT08150M**	8	28	50	150	105	27	10	**170.135**	5 mm	**170.003**	3 mm	1,42
5479917	**KM4X63HCT10085M**	10	30	50	85	39	31	10	**170.135**	5 mm	**170.003**	3 mm	1,15
5552289	**KM4X63HCT10150M**	10	30	50	150	105	31	10	**170.135**	5 mm	**170.003**	3 mm	1,49
5479918	**KM4X63HCT12090M**	12	32	50	90	45	36	10	**170.135**	5 mm	**170.003**	3 mm	1,19
5552290	**KM4X63HCT12150M**	12	32	50	150	105	36	10	**170.135**	5 mm	**170.003**	3 mm	1,54
5552291	**KM4X63HCT14090M**	14	34	50	90	46	36	10	**170.135**	5 mm	**170.005**	5 mm	1,20
5552292	**KM4X63HCT14150M**	14	34	50	150	105	36	10	**170.135**	5 mm	**170.005**	5 mm	1,59
5479919	**KM4X63HCT16095M**	16	38	50	95	52	39	10	**170.135**	5 mm	**170.003**	3 mm	1,30
5552293	**KM4X63HCT16150M**	16	38	50	150	105	39	10	**170.135**	5 mm	**170.005**	5 mm	1,76
5552294	**KM4X63HCT18095M**	18	40	50	95	52	39	10	**170.135**	5 mm	**170.005**	5 mm	1,33
5552295	**KM4X63HCT18150M**	18	40	50	150	105	39	10	**170.135**	5 mm	**170.005**	5 mm	1,84
5479950	**KM4X63HCT20100M**	20	42	50	100	58	41	10	**170.135**	5 mm	**170.003**	3 mm	1,40
5552296	**KM4X63HCT20150M**	20	42	50	150	105	41	10	**170.135**	5 mm	**170.005**	5 mm	1,92
5552297	**KM4X63HCT25120M**	25	50	63	120	51	47	10	**170.136**	6 mm	**170.005**	5 mm	2,09
5552298	**KM4X63HCT32125M**	32	60	63	125	59	51	10	**170.136**	6 mm	**170.005**	5 mm	2,37

NOTE: Do not over torque actuation screw. Tighten by hand until stop is felt.
Supplied with stop screw.
Actuation wrench must be ordered separately.
Reduction sleeves are available and must be ordered separately.
KM4X™ coolant unit and wrench are available and must be ordered separately; see page B84.



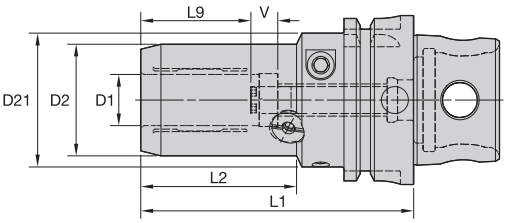

L9: minimum clamping length
V: maximum adjusting length

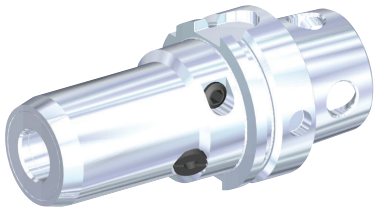

HC • Inch





order number	catalog number	D1	D2	D21	L1	L2	L9	V	wrench size actuation screw	wrench size actuation screw	length adjustment wrench	wrench size stop screw	lbs
5549163	**KM4X63HC025325**	1/4	1.01	1.96	3.250	1.30	1.06	.39	**170.135**	5 mm	**170.002**	2.5 mm	2.50
5549164	**KM4X63HC038338**	3/8	1.17	1.96	3.380	1.54	1.22	.39	**170.135**	5 mm	**170.002**	2.5 mm	2.56
5549165	**KM4X63HC050350**	1/2	1.24	1.96	3.500	1.75	1.42	.39	**170.135**	5 mm	**170.002**	2.5 mm	2.57
5549166	**KM4X63HC062375**	5/8	1.48	1.96	3.750	2.03	1.54	.39	**170.135**	5 mm	**170.003**	3 mm	2.86
5549167	**KM4X63HC075400**	3/4	1.64	1.96	4.000	2.28	1.61	.39	**170.135**	5 mm	**170.003**	3 mm	2.96
5549168	**KM4X63HC100475**	1	1.95	2.47	4.750	2.01	1.85	.39	**170.136**	6 mm	**170.004**	4 mm	4.59
5549169	**KM4X63HC125500**	1 1/4	2.35	2.47	5.000	2.32	2.01	.39	**170.136**	6 mm	**170.004**	4 mm	5.32

NOTE: Do not over torque actuation screw. Tighten by hand until stop is felt.
Supplied with stop screw.
Actuation wrench must be ordered separately.
Reduction sleeves are available and must be ordered separately.
KM4X™ coolant unit and wrench are available and must be ordered separately; see page B84.



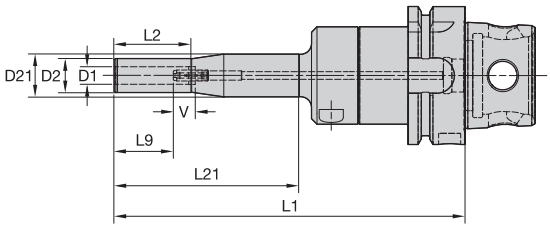

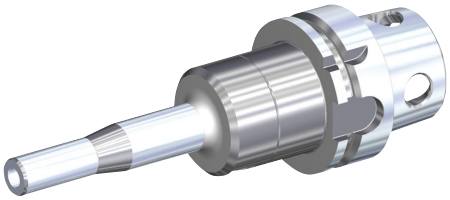

L9: minimum clamping length
V: maximum adjusting length

HCSLT • Metric (SLT)





order number	catalog number	D1	D2	D21	L1	L2	L9	L21	V	actuation wrench	wrench size actuation screw	length adjustment wrench	wrench size stop screw	kg
5479913	**KM4X63HCSLT06160M**	6	14	20	160	35	27	90	10	**170.135**	5 mm	**170.002**	2.5 mm	1,38
5479914	**KM4X63HCSLT08160M**	8	16	20	160	35	27	90	10	**170.135**	5 mm	**170.002**	2.5 mm	1,39
5479915	**KM4X63HCSLT10160M**	10	18	44	160	85	31	134	10	**170.135**	5 mm	**170.003**	3 mm	1,37

NOTE: Do not over torque actuation screw. Tighten by hand until stop is felt.
Supplied with stop screw.
Actuation wrench must be ordered separately.
Reduction sleeves are available and must be ordered separately.
KM4X™ coolant unit and wrench are available and must be ordered separately; see page B84.



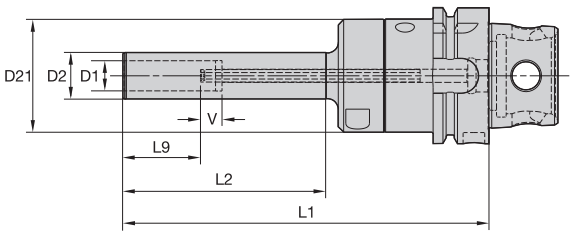

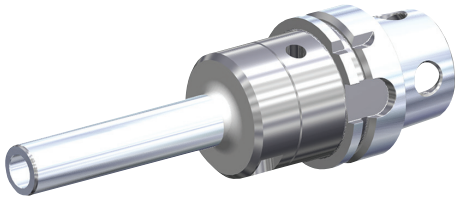

L9: minimum clamping length
V: maximum adjusting length

HCSLT • Metric (SL)





order number	catalog number	D1	D2	D21	L1	L2	L9	V	actuation wrench	wrench size actuation screw	length adjustment wrench	wrench size stop screw	kg
5479912	**KM4X63HCSL12170M**	12	20	44	170	95	36	10	**170.135**	5 mm	**170.002**	2.5 mm	1,41
5549202	**KM4X63HCSL14170M**	14	22	52	170	95	36	10	**170.135**	5 mm	**170.002**	2.5 mm	1,64
5549203	**KM4X63HCSL16170M**	16	24	52	170	95	39	10	**170.135**	5 mm	**170.002**	2.5 mm	1,66
5549204	**KM4X63HCSL18170M**	18	26	52	170	95	39	10	**170.135**	5 mm	**170.002**	2.5 mm	1,70
5549205	**KM4X63HCSL20170M**	20	28	52	170	95	41	10	**170.135**	5 mm	**170.002**	2.5 mm	1,74

NOTE: Do not over torque actuation screw. Tighten by hand until stop is felt.
Supplied with stop screw.
Actuation wrench must be ordered separately.
Reduction sleeves are available and must be ordered separately.
KM4X™ coolant unit and wrench are available and must be ordered separately; see page B84.



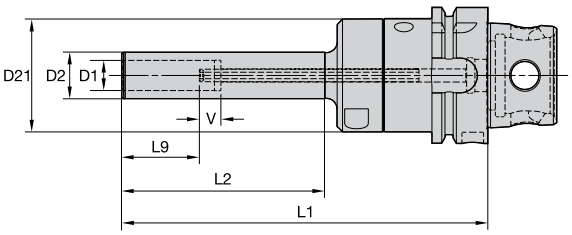



L9: minimum clamping length
V: maximum adjusting length

HCSLT • Inch (SL)

order number	catalog number	D1	D2	D21	L1	L2	L9	V	wrench size actuation screw	wrench size actuation screw	length adjustment wrench	wrench size stop screw	lbs
5549200	**KM4X63HCSL050669**	1/2	.81	2.07	6.693	3.74	1.42	.39	**170.135**	5 mm	**170.002**	2.5 mm	3.59
5549201	**KM4X63HCSL075669**	3/4	1.06	2.07	6.693	3.74	1.61	.39	**170.135**	5 mm	**170.002**	2.5 mm	3.83

NOTE: Do not over torque actuation screw. Tighten by hand until stop is felt.
Supplied with stop screw.
Actuation wrench must be ordered separately.
Reduction sleeves are available and must be ordered separately.
KM4X™ coolant unit and wrench are available and must be ordered separately; see page B84.



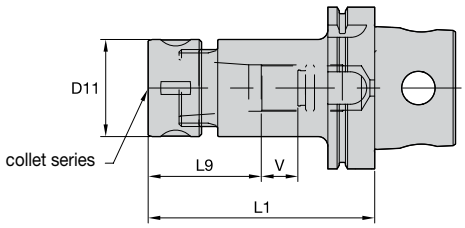



	Collet Capacity			
	mm		in	
TG collet series	min	max	min	max
TG50	1,1	13,5	1/32	17/32
TG75	2,6	20,0	3/64	3/4
TG100	2,6	25,5	5/64	1

TG Collet Chuck

order number	catalog number	collet series	D11		L1		L9		V		kg	lbs
			mm	in	mm	in	mm	in	mm	in		
5548989	**KM4X63TG050100M**	TG50	38	1.50	100	3.937	42	1.65	21	.83	1,18	2.60
5549160	**KM4X63TG050160M**	TG50	38	1.50	160	6.300	42	1.65	58	2.29	1,67	3.68
5549161	**KM4X63TG075115M**	TG75	50	1.97	115	4.528	54	2.13	16	.63	1,72	3.80
5549162	**KM4X63TG100135M**	TG100	60	2.36	135	5.315	70	2.76	17	.67	2,10	4.64

Spare Parts






catalog number	locknut	locknut wrench	locknut maximum torque (Nm)	locknut maximum torque (ft. lbs.)	stop screw	wrench size stop screw	stop screw cone cap
KM4X63TG050100M	**LNA050M**	**HSW34M**	68	50	**SS056041G**	4mm & 5/32	**SSCC056**
KM4X63TG050160M	**LNA050M**	**HSW34M**	68	50	**SS056041G**	4mm & 5/32	**SSCC056**
KM4X63TG075115M	**LNA075M**	**HSW45M**	136	100	**SS081041G**	4mm & 5/32	**SSCC081**
KM4X63TG100135M	**LNA100M**	**HSW58M**	203	150	**SS112041G**	4mm & 5/32	**SSCC112**

NOTE: Collet must be loaded into locknut first. Before loading into the chuck body, insert the cutting tool, then tighten to the recommended tightening torque.
Collet chuck technical section, see page M98 of the Kennametal Innovations Master Catalog Tooling Systems (A-12-02809).
Supplied with locknut and stop screw.
Locknut wrench must be ordered separately.
Interchangeable coolant-style locknuts and coolant disks are available and must be ordered separately; see page L19 of the Kennametal Innovations Master Catalog Tooling Systems (A-12-02809).
Stop screw coolant caps are available and must be ordered separately; see pages L34–L35 of the Kennametal Innovations Master Catalog Tooling Systems (A-12-02809).
ER standard straight-bore collets, see page J50 of the Kennametal Innovations Master Catalog Tooling Systems (A-12-02809).
ER tap collets, see pages J58–J59 of the Kennametal Innovations Master Catalog Tooling Systems (A-12-02809).
ER TCT tension-only tap collets, see page J60 of the Kennametal Innovations Master Catalog Tooling Systems (A-12-02809).
KM4X™ coolant unit and wrench are available and must be ordered separately; see page B84.



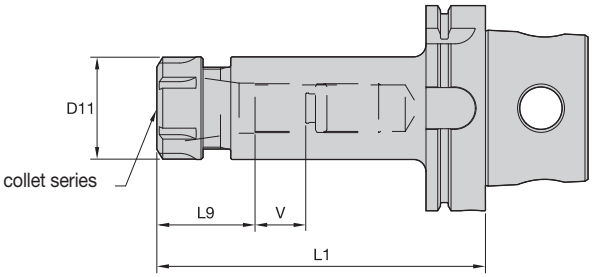

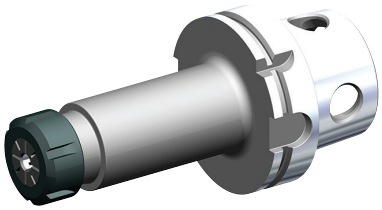

	Collet Capacity			
	mm		in	
ER collet series	min	max	min	max
ER25	1,0	16,0	.04	.63
ER32	2,0	20,0	.08	.81
ER40	3,0	26,0	.12	1.00

ER Collet Chuck

order number	catalog number	collet series	D11		L1		L9		V			
			mm	in	mm	in	mm	in	mm	in	kg	lbs
5549544	**KM4X63ER16060M**	ER16	28	1.10	60	2.360	32	1.26	4	.16	0,81	1.78
5472274	**KM4X63ER16100M**	ER16	28	1.10	100	3.937	32	1.26	44	1.73	0,98	2.16
5552079	**KM4X63ER16120M**	ER16	28	1.10	120	4.724	32	1.26	53	2.09	1,06	2.34
5472275	**KM4X63ER20100M**	ER20	34	1.34	100	3.937	36	1.42	37	1.46	1,08	2.37
5552280	**KM4X63ER25065M**	ER25	42	1.65	65	2.559	29	1.15	—	—	0,92	2.02
5472276	**KM4X63ER25100M**	ER25	42	1.65	100	3.937	37	1.46	30	1.18	1,24	2.74
5552281	**KM4X63ER25120M**	ER25	42	1.65	120	4.724	40	1.57	40	1.58	1,42	3.13
5552282	**KM4X63ER32065M**	ER32	50	1.97	65	2.559	34	1.35	—	—	0,96	2.12
5472277	**KM4X63ER32100M**	ER32	50	1.97	100	3.937	45	1.77	22	.87	1,43	3.16
5552283	**KM4X63ER32120M**	ER32	50	1.97	120	4.724	45	1.77	32	1.26	1,66	3.67
5552284	**KM4X63ER40065M**	ER40	63	2.48	65	2.559	38	1.51	—	—	1,08	2.38
5552285	**KM4X63ER40120M**	ER40	63	2.48	120	4.724	54	2.13	21	.82	1,82	4.02

(continued)

(ER Collet Chuck with Round Locknut — continued)

Spare Parts







catalog number	locknut	hexnut	locknut wrench	hexnut wrench	stop screw	counterbore collet torque Nm	counterbore collet torque ft. lbs.	straight collet torque Nm	straight collet torque ft. lbs.
KM4X63ER16060M	**–**	**LNHSER16M**	**–**	**OEW25M**	SS44038G	32	24	56	42
KM4X63ER16100M	**–**	**LNHSER16M**	**–**	**OEW25M**	SS44038G	32	24	56	42
KM4X63ER16120M	**–**	**LNHSER16M**	**–**	**OEW25M**	SS44038G	32	24	56	42
KM4X63ER20100M	**–**	**LNHSER20M**	**–**	**OEW30M**	SS56041G	40	30	80	59
KM4X63ER25065M	**LNSER25M**	**–**	**ER25WM**	**–**	–	–	–	104	77
KM4X63ER25100M	**LNSER25M**	**–**	**ER25WM**	**–**	SS75041G	–	–	104	77
KM4X63ER25120M	**LNSER25M**	**–**	**ER25WM**	**–**	SS75041G	–	–	104	77
KM4X63ER32065M	**LNSER32M**	**–**	**ER32WM**	**–**	–	–	–	136	100
KM4X63ER32100M	**LNSER32M**	**–**	**ER32WM**	**–**	SS94041G	–	–	136	100
KM4X63ER32120M	**LNSER32M**	**–**	**ER32WM**	**–**	SS94041G	–	–	136	100
KM4X63ER40065M	**LNSER40M**	**–**	**ER40WM**	**–**	–	–	–	176	130
KM4X63ER40120M	**LNSER40M**	**–**	**ER40WM**	**–**	SS112041G	–	–	176	130

NOTE: KM4X™ coolant unit and wrench are available and must be ordered separately; see page B84.



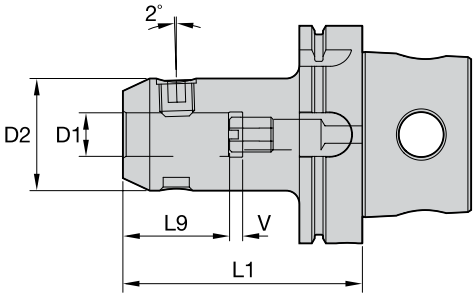



WN • Whistle Notch Adapter • Metric





order number	catalog number	D1	D2	L1	L9	V	lock screw	wrench size lock screw	lock screw maximum torque (Nm)	stop screw	wrench size stop screw	kg
5552735	**KM4X63WN06080M**	6	25	80	30	10	**SS03M012**	3 mm	7	**571.060**	2.5 mm	0,90
5552736	**KM4X63WN08080M**	8	28	80	30	10	**SS03M014**	4 mm	15	**571.067**	3.0 mm	0,95
5552737	**KM4X63WN10080M**	10	35	80	35	10	**SS03M018**	5 mm	25	**571.068**	4.0 mm	1,07
5552738	**KM4X63WN12090M**	12	42	90	40	10	**SS03M023**	6 mm	35	**571.074**	5.0 mm	1,32
5552739	**KM4X63WN14090M**	14	44	90	40	10	**SS03M023**	6 mm	35	**571.074**	5.0 mm	1,37
5552760	**KM4X63WN16100M**	16	48	100	43	10	**SS03M025**	6 mm	50	**571.075**	6.0 mm	1,61
5552761	**KM4X63WN18100M**	18	50	100	43	10	**SS03M025**	6 mm	50	**571.075**	6.0 mm	1,68
5552762	**KM4X63WN20100M**	20	52	100	45	10	**SS03M026**	8 mm	95	**571.076**	6.0 mm	1,73
5552763	**KM4X63WN25110M**	25	65	110	50	10	**SS03M027**	10 mm	135	**571.077**	6.0 mm	2,36

NOTE: Do not overtighten lock screw; use torque recommendations above.
Supplied with lock screw and stop screw.
Lock screw or stop screw wrenches not included.
KM4X™ coolant unit and wrench are available and must be ordered separately; see page B84.



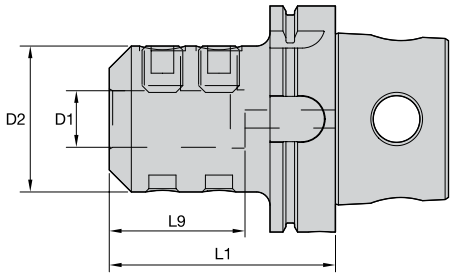



EM • Metric



order number	catalog number	D1	D2	L1	L9	lock screw	wrench size lock screw	lock screw maximum torque (Nm)	kg
5472193	**KM4X63EM06065M**	6	25	65	40	**SS03M012**	3 mm	7	0,85
5549522	**KM4X63EM08065M**	8	28	65	40	**SS03M014**	4 mm	15	0,88
5549525	**KM4X63EM10065M**	25	35	65	45	**SS03M018**	5 mm	25	0,96
5472194	**KM4X63EM12080M**	12	42	80	50	**SS03M023**	6 mm	35	1,22
5549527	**KM4X63EM14080M**	14	44	80	50	**SS03M023**	6 mm	35	1,26
5549529	**KM4X63EM16068M**	16	48	68	53	**SS03M025**	6 mm	50	1,08
5472195	**KM4X63EM16080M**	16	48	80	53	**SS03M025**	6 mm	50	1,35
5549541	**KM4X63EM18080M**	18	50	80	53	**SS03M025**	6 mm	52	1,39
5472196	**KM4X63EM20080M**	20	52	80	55	**SS03M026**	8 mm	95	1,42
5549542	**KM4X63EM25105M**	25	65	105	60	**SS03M027**	10 mm	142	2,28
5472197	**KM4X63EM25110M**	25	65	110	60	**SS03M027**	10 mm	142	2,39
5549543	**KM4X63EM32108M**	32	72	108	65	**SS03M029**	10 mm	245	2,57
5472198	**KM4X63EM32110M**	32	72	110	65	**SS03M029**	10 mm	245	2,64

NOTE: Do not overtighten lock screw; use torque recommendations above.
Supplied with lock screw.
Lock screw wrench not included.
KM4X™ coolant unit and wrench are available and must be ordered separately; see page B84.



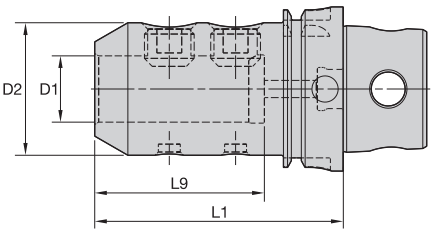

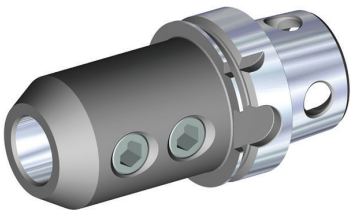

EM • Inch



order number	catalog number	D1	D2	L1	L9	lock screw	wrench size lock screw	lock screw maximum torque (ft. lbs.)	lbs
5472173	**KM4X63EM025300**	1/4	1.00	3.000	1.70	**ELS025025PKG**	1/8	8	1.99
5472174	**KM4X63EM038300**	3/8	1.00	3.000	1.73	**ELS038031PKG**	3/16	15	1.95
5549519	**KM4X63EM050216**	1/2	1.38	2.598	1.97	**ELS044038PKG**	7/32	20	2.07
5472175	**KM4X63EM050300**	1/2	1.38	3.000	1.97	**ELS044038PKG**	7/32	20	2.24
5549520	**KM4X63EM062275**	5/8	1.63	2.750	2.09	**ELS056050PKG**	1/4	38	2.33
5549521	**KM4X63EM075275**	3/4	1.75	2.750	2.22	**ELS062050PKG**	5/16	70	2.38
5472176	**KM4X63EM075375**	3/4	1.75	3.750	2.22	**ELS062050PKG**	5/16	70	3.07
5549523	**KM4X63EM088275**	7/8	2.00	2.750	2.22	**ELS062050PKG**	5/16	70	2.61
5549524	**KM4X63EM100359**	1	2.00	3.583	2.56	**ELS075056PKG**	3/8	110	3.17
5472177	**KM4X63EM100375**	1	2.00	3.750	2.56	**ELS075056PKG**	3/8	110	3.27
5549526	**KM4X63EM125354**	1 1/4	2.50	4.250	2.51	**ELS075062PKG**	3/8	120	4.73
5472178	**KM4X63EM125425**	1 1/4	2.50	4.250	2.51	**ELS075062PKG**	3/8	120	4.72
5549528	**KM4X63EM150462**	1 1/2	2.75	4.626	2.93	**ELS075069PKG**	3/8	180	5.54

NOTE: Do not overtighten lock screw; use torque recommendations above.
Supplied with lock screw.
Lock screw wrench not included.
KM4X™ coolant unit and wrench are available and must be ordered separately; see page B84.



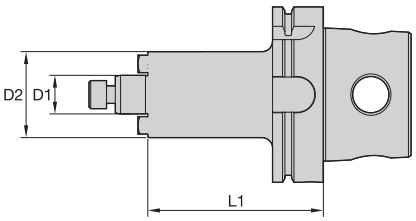

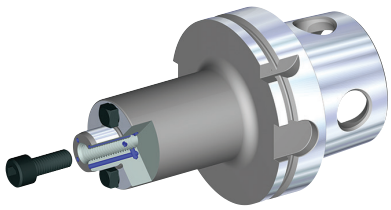

SMC • Metric





order number	catalog number	D1	D2	L1	lock screw	drive key	wrench size lock screw	kg
5545229	**KM4X63SMC22050M**	22	49	50	**MS1234**	**KDK22M**	8 mm	1,14
5545390	**KM4X63SMC27060M**	27	60	60	**KLSS27M**	**KDK27M**	10 mm	1,51
5545391	**KM4X63SMC32060M**	32	78	60	**KLSS32M**	**KDK32M**	14 mm	1,85
5545392	**KM4X63SMC40060M**	40	83	60	**KLSS40M**	**KDK40M**	17 mm	2,21

NOTE: KM4X™ coolant unit and wrench are available and must be ordered separately; see page B84.



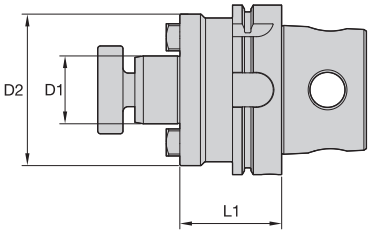

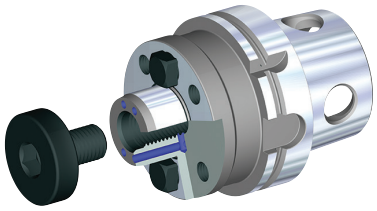

SMC • Inch





order number	catalog number	D1	D2	L1	lock screw	drive key	wrench size lock screw	lbs
5545393	**KM4X63SMC050200**	1/2	1.44	2.00	**KLS05**	**KDK04**	3/16	2.08
5545394	**KM4X63SMC075200**	3/4	1.75	2.00	**KLS07**	**KDK05**	1/4	2.37
5545395	**KM4X63SMC100225**	1	2.75	2.25	**KLS10**	**KDK06**	5/16	3.30
5545396	**KM4X63SMC125225**	1 1/4	2.88	2.25	**KLS12**	**KDK08**	5/16	3.58
5545397	**KM4X63SMC150225**	1 1/2	3.81	1.07	**KLS15**	**KDK10**	3/8	4.80

NOTE: Do not overtighten lock screw.
Supplied with lock screw and drive keys.
Lock screw wrench not included.
KM4X™ coolant unit and wrench are available and must be ordered separately; see page B84.



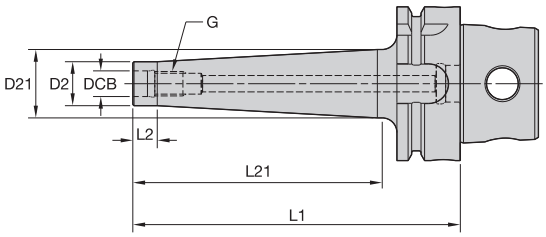

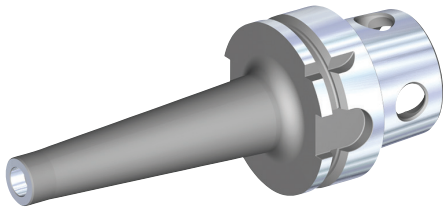

ST

order number	catalog number	DCB	D2	D21	G	L1	L2	L21	kg
5552404	**KM4X63ST06059M**	6,5	10	11	M6 X 1	59	10	33	0,74
5552406	**KM4X63ST06084M**	6,5	10	12	M6 X 1	84	10	58	0,75
5552408	**KM4X63ST06109M**	6,5	10	14	M6 X 1	109	10	83	0,78
5552430	**KM4X63ST08059M**	8,5	13	15	M8 X 1.25	59	10	33	0,75
5552432	**KM4X63ST08084M**	8,5	13	18	M8 X 1.25	84	10	58	0,79
5552434	**KM4X63ST08109M**	8,5	13	23	M8 X 1.25	109	10	83	0,87
5552436	**KM4X63ST08134M**	8,5	13	23	M8 X 1.25	134	10	108	0,91
5552438	**KM4X63ST10059M**	10,5	18	20	M10 X 1.5	59	10	33	0,78
5552440	**KM4X63ST10084M**	10,5	18	25	M10 X 1.5	84	10	58	0,87
5552442	**KM4X63ST10109M**	10,5	18	25	M10 X 1.5	109	10	83	0,87
5552444	**KM4X63ST10134M**	10,5	18	28	M10 X 1.5	134	10	108	1,04
5552446	**KM4X63ST12059M**	12,5	21	24	M12 X 1.75	59	10	33	0,80
5552447	**KM4X63ST12084M**	12,5	21	24	M12 X 1.75	84	10	58	0,87
5552448	**KM4X63ST12109M**	12,5	21	28	M12 X 1.75	109	10	83	1,00
5552449	**KM4X63ST12134M**	12,5	21	31	M12 X 1.75	134	10	108	1,13
5552450	**KM4X63ST16059M**	17,0	24	33	M16 X 2.0	59	10	33	0,83
5552451	**KM4X63ST16084M**	17,0	24	33	M16 X 2.0	84	10	58	0,96
5552452	**KM4X63ST16109M**	17,0	24	33	M16 X 2.0	109	10	83	1,08
5552453	**KM4X63ST16134M**	17,0	24	33	M16 X 2.0	134	10	108	1,20

NOTE: KM4X™ coolant unit and wrench are available and must be ordered separately; see page B84.



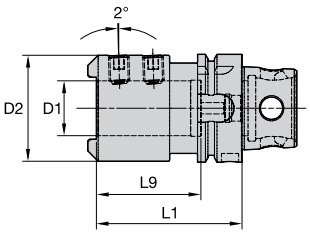



WD • With Drive



order number	catalog number	D1 mm	D1 in	D2 mm	D2 in	L1 mm	L1 in	L9 mm	L9 in	clamp screw	wrench size clamp screw	clamp screw torque (Nm)	clamp screw torque (ft. lbs.)	kg
5500004	**KM4X63WD32085M**	32	1.26	62	2.44	85	3.35	61	2.40	**SS03M023**	6 mm	35	26	1,64

NOTE: Do not overtighten clamp screw
Supplied with clamp screw.
Clamp screw wrench not included.
KM4X™ coolant unit and wrench are available and must be ordered separately; see page B84.



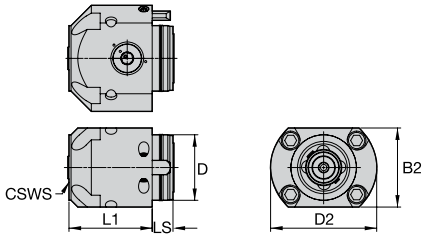



CL2NS-EF • Flange Mount, Side Access • Metric



order number	catalog number	CSWS system size	D	D2	B2	L1	LS	wrench size actuation screw	mounting screw	kg
5544251	**KM4X63CL2NSEF**	KM4X63	63	102	76	80	20	10 mm	**MS-1262**	3,83

NOTE: For mounting dimensions, reference the Kennametal Innovations Master Catalog Tooling Systems 2013 (A-12-02809); see page M53, same mounting as KM63.
For technical information, reference the Kennametal Innovations Master Catalog Tooling Systems 2013 (A-12-02809); see pages M32–M33.
For For actuation wrench, reference the Kennametal Innovations Master Catalog Tooling Systems 2013 (A-12-02809); see page L53.



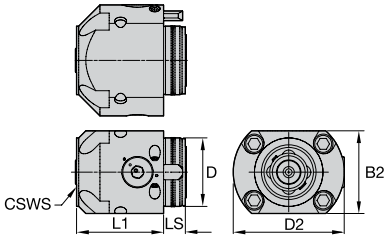



CL2NT-EF • Flange Mount, Top Access • Metric



order number	catalog number	CSWS system size	D	D2	B2	L1	LS	wrench size actuation screw	mounting screw	kg
5544252	**KM4X63CL2NTEF**	KM4X63	63	102	76	80	20	10 mm	**MS-1262**	3,82

NOTE: For mounting dimensions, reference the Kennametal Innovations Master Catalog Tooling Systems 2013 (A-12-02809); see page M53, same mounting as KM63.
For technical information, reference the Kennametal Innovations Master Catalog Tooling Systems 2013 (A-12-02809); see pages M32–M33.
For For actuation wrench, reference the Kennametal Innovations Master Catalog Tooling Systems 2013 (A-12-02809); see page L53.



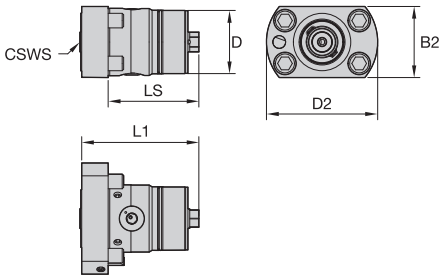

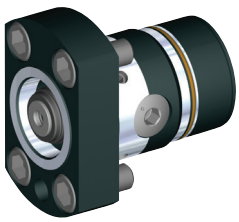

CL2NS-BC • Boring Cartridge • Side Access



order number	catalog number	CSWS system size	D	D2	B2	L1	LS	wrench size actuation screw	mounting screw	kg
5881394	**KM4X63CL2NSBC5010B**	KM4X63	74	122	78	30	100	10 mm	**MS1239**	4,16

NOTE: For technical information, reference the Kennametal Innovations Master Catalog Tooling Systems 2013 (A-12-02809); see pages M32–M33.
For mounting dimensions, reference the Kennametal Innovations Master Catalog Tooling Systems 2013 (A-12-02809); see page M57, same mounting as KM63.
For For actuation wrench, reference the Kennametal Innovations Master Catalog Tooling Systems 2013 (A-12-02809); see page L53.

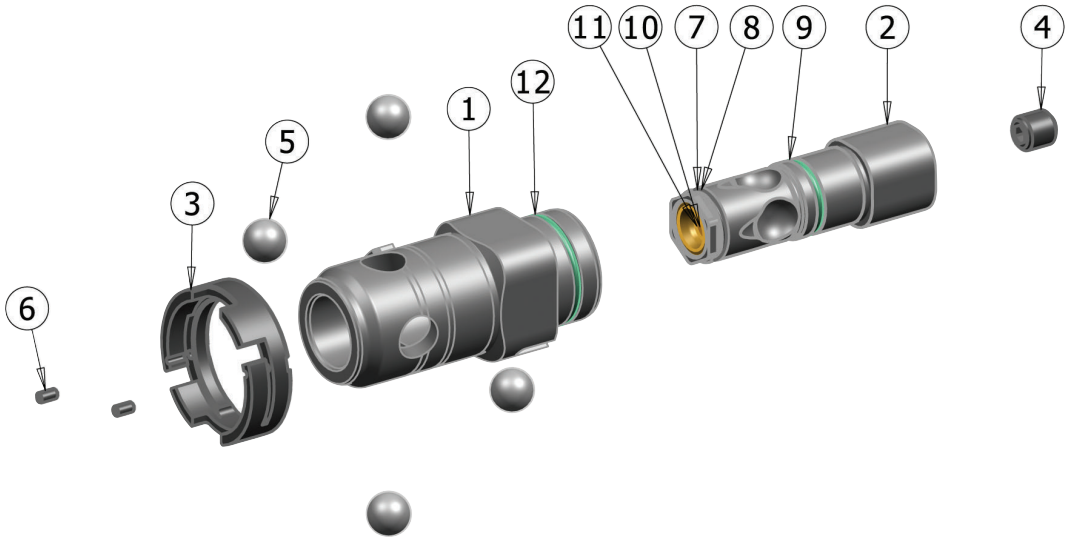

KIT

order number	catalog number	description
6241045	**KM4X63NCASP**	KM4X63 Spindle Kit
6241046	**KM4X63SPPKG**	KM4X63 Spindle Repair Kit

detail number	description	quantity
1	**cansiter**	1
2	**lockrod**	1
3	**canister ring**	1
4	**modified set screw**	1
5	**chrome ball**	4
6	**set screw**	2
7	**O-ring**	1
8	**back-up ring**	1
9	**O-ring**	1
10	**O-ring**	1
11	**back-up ring**	2
12	**O-ring**	1

NOTE: Standard kit contains items 1–12.
Repair package contains items 7–12.
Assembly and disassembly tools sold separately; see page B78.

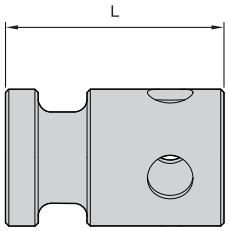

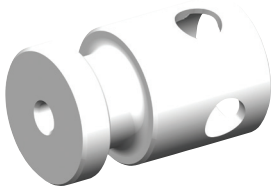

Removal Tool

order number	catalog number	L mm	L in	kg	lbs
5701918	**KM4X63CR60124639**	67,00	2.64	0,29	0.63

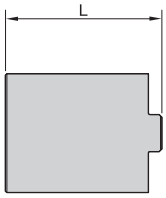

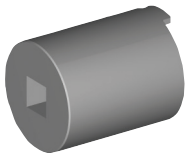

Assembly Tool

order number	catalog number	L mm	L in	kg	lbs
5701917	**KM4X63SPA60115788**	58,00	2.28	0,24	0.54



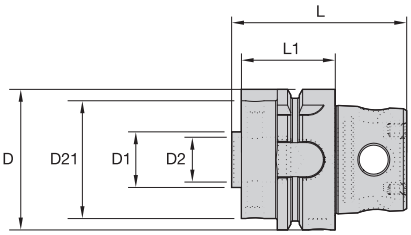

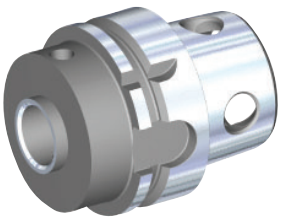

Probe Adapter

order number	catalog number	D mm	D in	D1 mm	D1 in	D2 mm	D2 in	D21 mm	D21 in	L mm	L in	L1 mm	L1 in	kg
5990571	**KM4X63RP40042M**	63,00	2.478	11,20	.441	39,75	1.565	—	—	74	2.9114	42	2	0,87
5718464	**KM4X63RP60042M**	63,00	2.478	20,06	.790	24,90	.9803	52,75	2.0768	78	3.0846	42	2	0,87

Gaging

- For acceptance testing on machine tool spindles.
- 0,003mm (.0001") maximum circular runout.
- Precision ground.



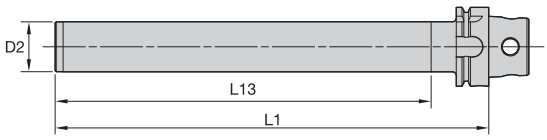

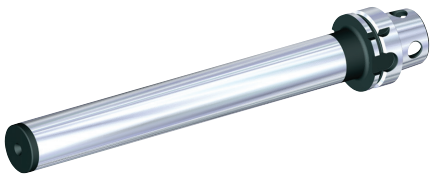

GB Gage Bar

order number	catalog number	D2 mm	D2 in	L1 mm	L1 in	L13 mm	L13 in	kg
5477456	**KM4X63GB40346M**	40	1.57	346	13.62	300	12	3,88
5552461	**KM4X63GB50350M**	50	1.97	350	13.78	304	12	5,65
5552462	**KM4X63GB63120M**	63	2.48	120	4.72	68	3	2,90

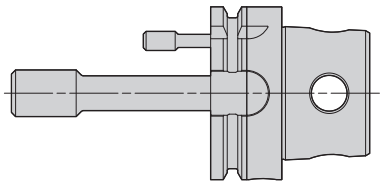

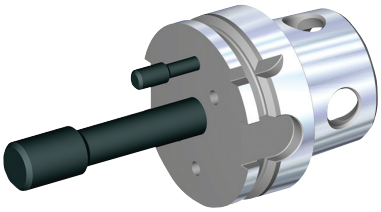

ATCP

order number	catalog number	kg	lbs
5477455	**KM4X63ATCP**	0,82	1.80

NOTE: Fine adjustment gage for automatic tool changer arm, used for center adjustment and angular adjustment.

Min. Max. Head

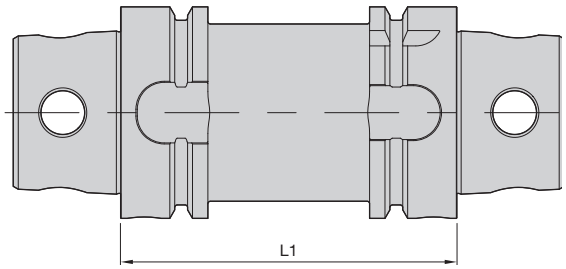

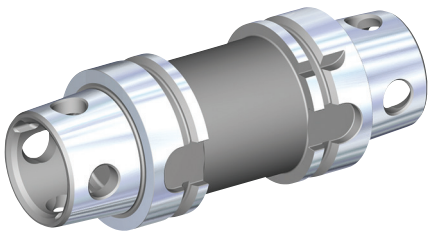

Min. Max. Head

		L1			
order number	catalog number	mm	in	kg	lbs
5477453	**KM4X63MINMAX**	100	4	2,30	5.06



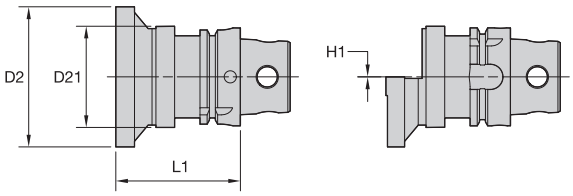

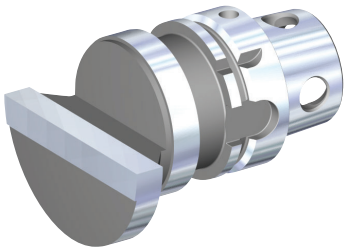

Timing Head

order number	catalog number	D2		D21		L1		H1			
		mm	in	mm	in	mm	in	mm	in	kg	lbs
5477452	**KM4X63TIM**	90	3.543	65	2.559	80	3.150	0	.000	1,83	4.04

Balancing Plug



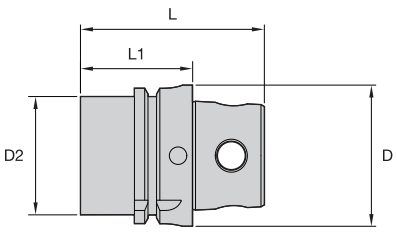

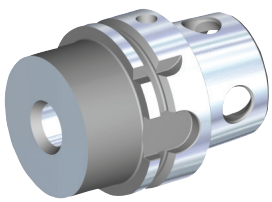

Balancing Plug

order number	catalog number	D		D2		L		L1			
		mm	in	mm	in	in	mm	in	mm	kg	lbs
5548441	**KM4X63BALPLUG**	63	2.500	53	2.077	3	81,950	2	50,000	2,14	4.71

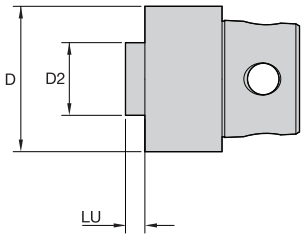

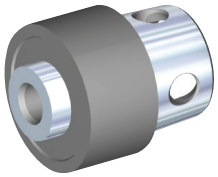

Power Check Adapter

order number	catalog number	D		D2		LU		kg	lbs
		mm	in	mm	in	mm	in		
6195752	**KM4X63POWC2M16**	63	2.480	30	1.181	8,00	.315	0,84	1.84

Blanks

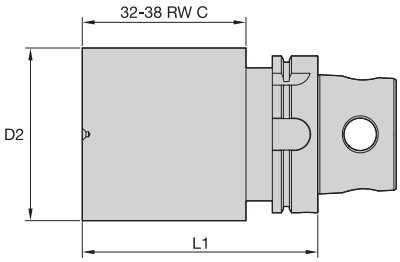

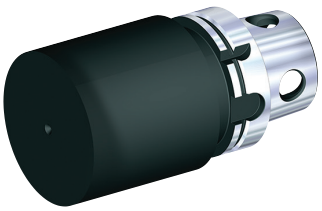

BN Blanks

order number	catalog number	D2		L1		hardness range	kg	lbs
		mm	in	mm	in			
5477451	**KM4X63BN65200M**	65	2.559	200	7.874	32#38 RC	5,10	11.24
5477450	**KM4X63BN115150M**	115	4.528	150	5.906	32#38 RC	9,73	21.46

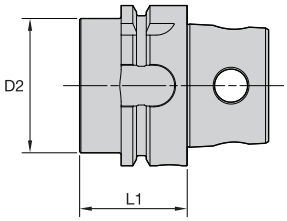



Plugs

order number	catalog number	D2 mm	D2 in	L1 mm	L1 in	kg	lbs
5552332	**KM4X63P**	53	2.077	32	1.258	1,01	2.23

Spindle Wiper

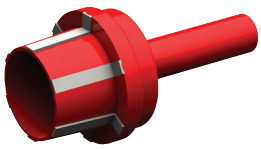

Spindle Wiper

order number	catalog number	system size	D2 mm	D2 in	LU mm	LU in
6127226	**KM4XSW63**	KM4X63	30	1.18	32	1.26

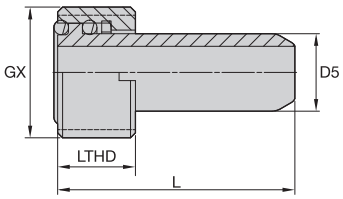



Coolant Supply Assembly Units

		LTHD		L		D5				
order number	catalog number	mm	in	mm	in	mm	in	GX	kg	lbs
5572428	**HPCA16**	10	.374	29	1.141	9	.373	M16 X 1.0	0,02	0.04

NOTE: Optional coolant tube for coolant pressure above 100 bar.
Max coolant pressure 200 bar.
Uses wrench 170.196.

Coolant Supply Assembly Wrench

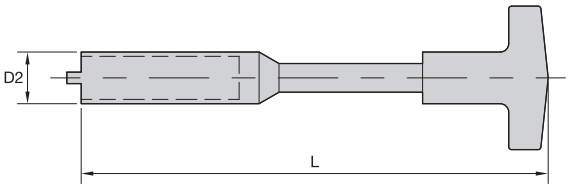

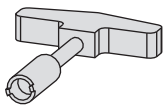

Coolant Supply Assembly Wrench

		D2		L			
order number	catalog number	mm	in	mm	in	recommended torque (Nm)	recommended torque (ft. lbs.)
1132992	**170.196**	14,5	.57	114	4.49	15	11

Fast, free, and easy registration.

On the Web

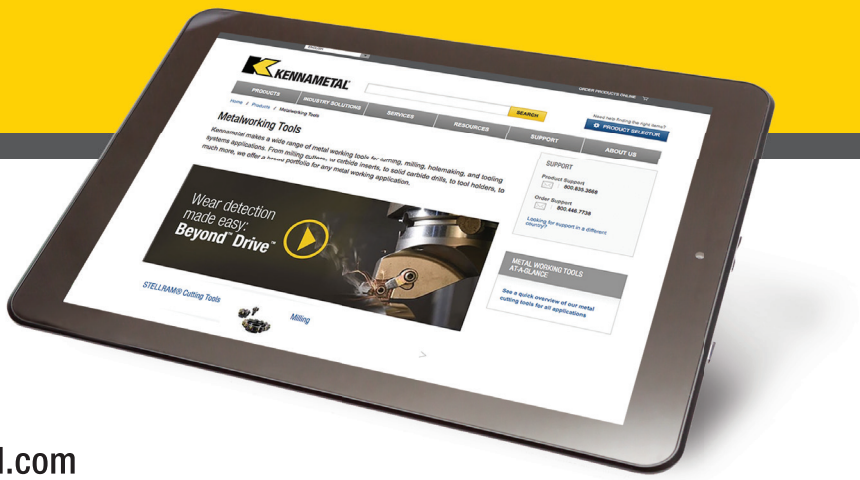

You can easily register with kennametal.com to obtain full access to the features of the site.

Find a Local Authorized Kennametal Distributor in Your Area

Kennametal offers world-class products and services globally. Our distributors know us, and more importantly, they know you. They know better than anyone in the industry how to put the global power of Kennametal to work for you — in your industry, in your region, and for your business.

Contact Us

Our customers are important to us. We want to provide you the best customer service in the industry. If you have a comment or question, please send it to us. We strive to respond to all inquiries within 24 hours.

Kennametal Products

Whether your operation is turning, milling, or holemaking, Kennametal brands are the high-performance tooling you need. We offer standard and custom solutions for the general engineering market.

KENNAMETAL®

kennametal.com

Technical Manual

KM4X™

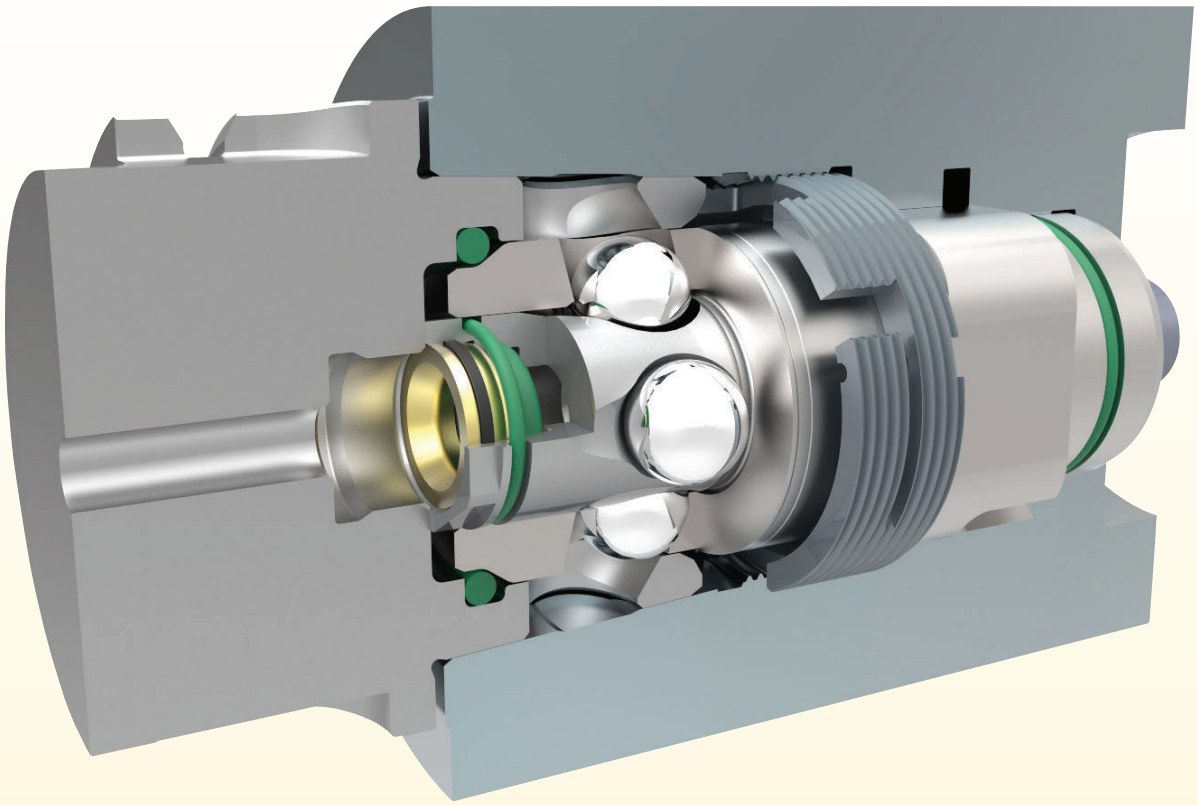

Technical Manual

Safety Instructions **C2**

KM4X System Overview **C3–C8**

2.1 Features C4–C6

2.2 Component List C7

2.3 Spindle Accessories C8

Operations **C9–C11**

3.1 Clamping Sequences C9–C10

3.2 Coolant Capability C11

Technical Specifications **C12–C16**

4.1 System Specifications C12

4.2 External Taper Specifications C13

4.3 Internal Taper Specifications C13

4.4 Application Limits C14–C16

4.5 Application Limits • Example C16

Spindle Design **C17–C18**

5.1 Drawbar Connection C17

5.2 Spring Pack Design C18

5.3 Spring Pack Design • Example C18

Instructions **C19–C25**

6.1 Pre-Installation Checklist C19

6.2 Installation C20–C24

6.3 Disassembly Instructions C25

6.4 Maintenance C25

Frequently Asked Questions **C26–C33**

Glossary **C34–C35**

Global Contacts **C36–C37**

Information Request Form **C38**

1. Safety Instructions



READ THIS FIRST

- Stored energy — Often, machines include sources of stored energy, including, but not limited to, springs, hydraulics, and pneumatics. Use caution when handling, assembling, and disassembling.
- Always use proper protective equipment when handling, working on, or around any machine.
- Ensure that all employees are properly trained.
- Under no circumstances should modifications be made to the components unless specified otherwise.
- Be mindful of both connection and machine limitations.
- For more information, read the applicable Material Safety Data Sheet provided by Kennametal and consult General Industry Safety and Health Regulations, Part 1910, Title 29 of the Code of Federal Regulations.
- These safety instructions are general guidelines. Many variables affect machining operations. It is impossible to cover every specific situation. The technical information included in this manual and recommendations on machining practices may not apply to your particular operation. For more information, consult the Kennametal Metalcutting Safety booklet, available free from Kennametal at 724 539 5747 or fax 724 539 5439. For specific product safety and environmental questions, contact our Corporate Environmental Health and Safety Office at 724 539 5066 or fax 724 539 5372.

2. KM4X™ System Overview

- Rigid configuration through optimum interference and higher clamping force.
- Evenly distributed clamping force.
- Simple design allows for front-loaded spindle configurations.
- Balanced-by-design for high spindle speed capability.
- Designed with turning, boring, drilling, and milling in mind.
- Capable of performing in a wide range of operations from low speed to high torque or high speed to low torque.
- Easily adaptable into spindles currently using HSK.
  — Same ATC gripper design.
- Higher mechanical advantage yields greater clamping force without requiring elevated levels of pull back force.
- Minimal loss of clamping force after continuous use.
- Eliminates concerns of fatiguing and sticking fingers.
- Higher maximum speed capabilities — Maintains taper contact at high speeds due to the use of interference.

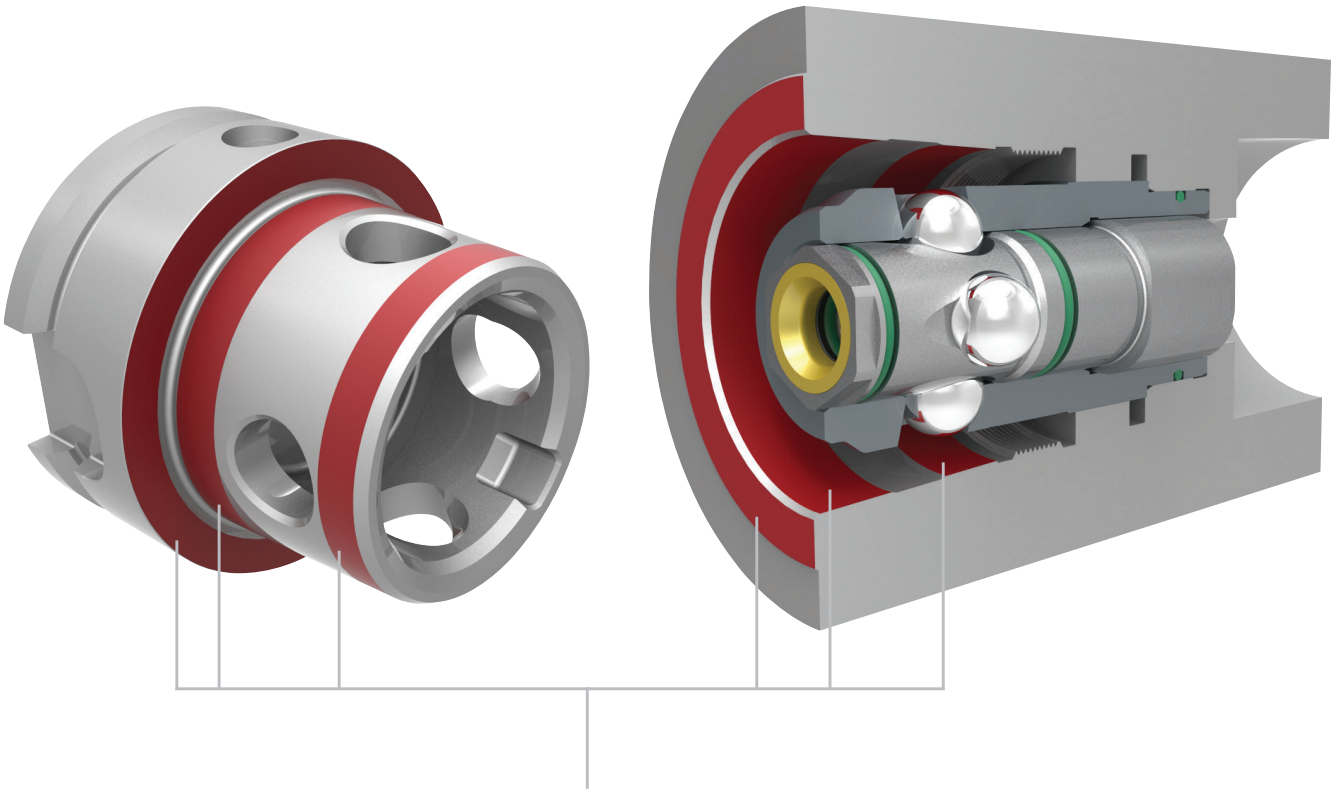

KM4X™ three-surface contact for improved stability and accuracy, optimized clamping force distribution, and interference fit provides higher stiffness.

2.1 Features

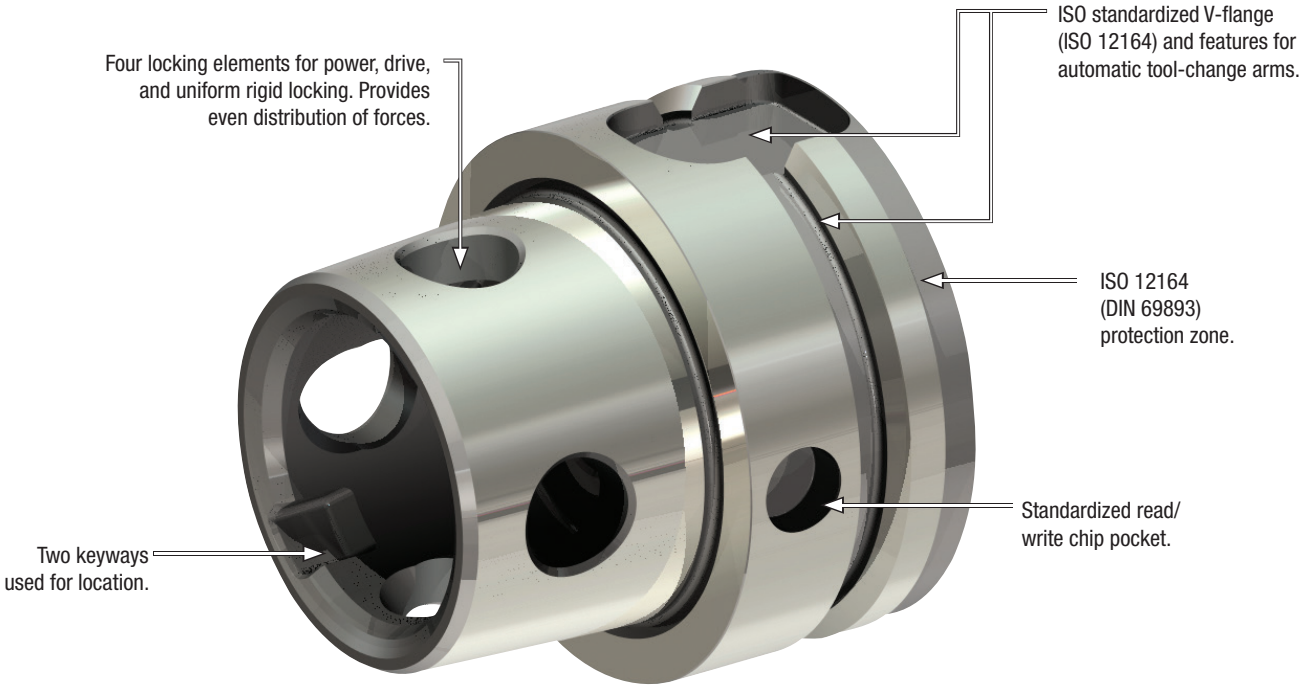

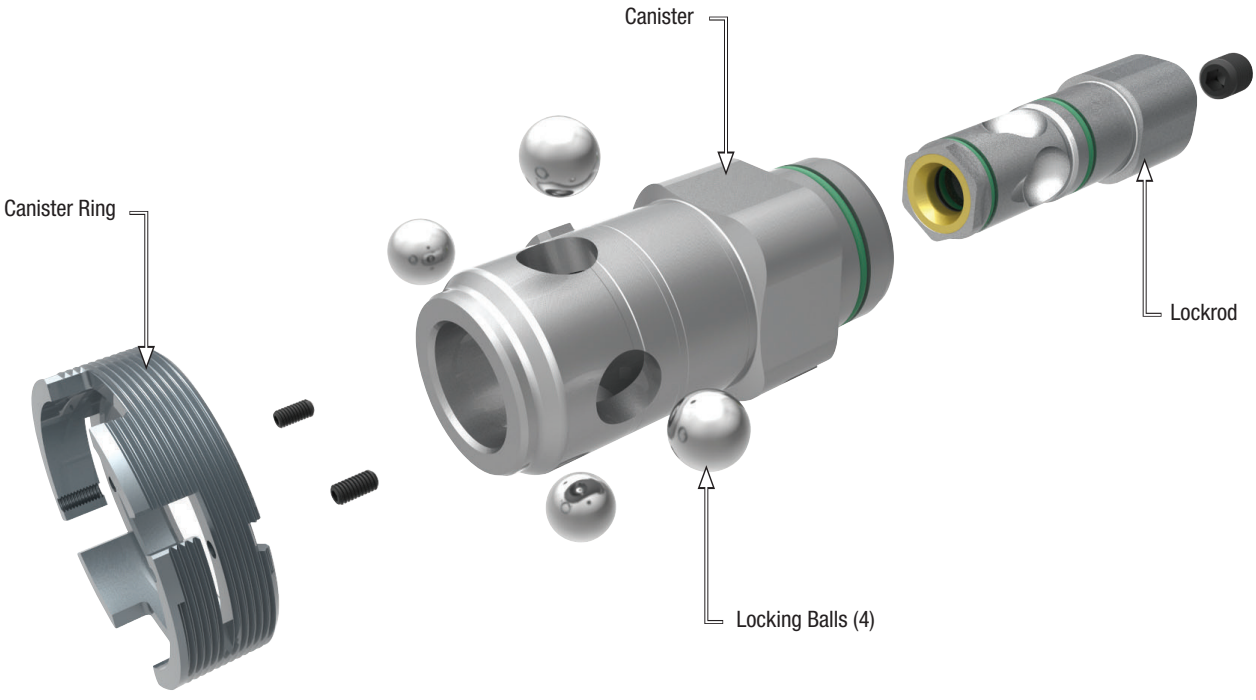

(continued)

(2.1 Features — continued)

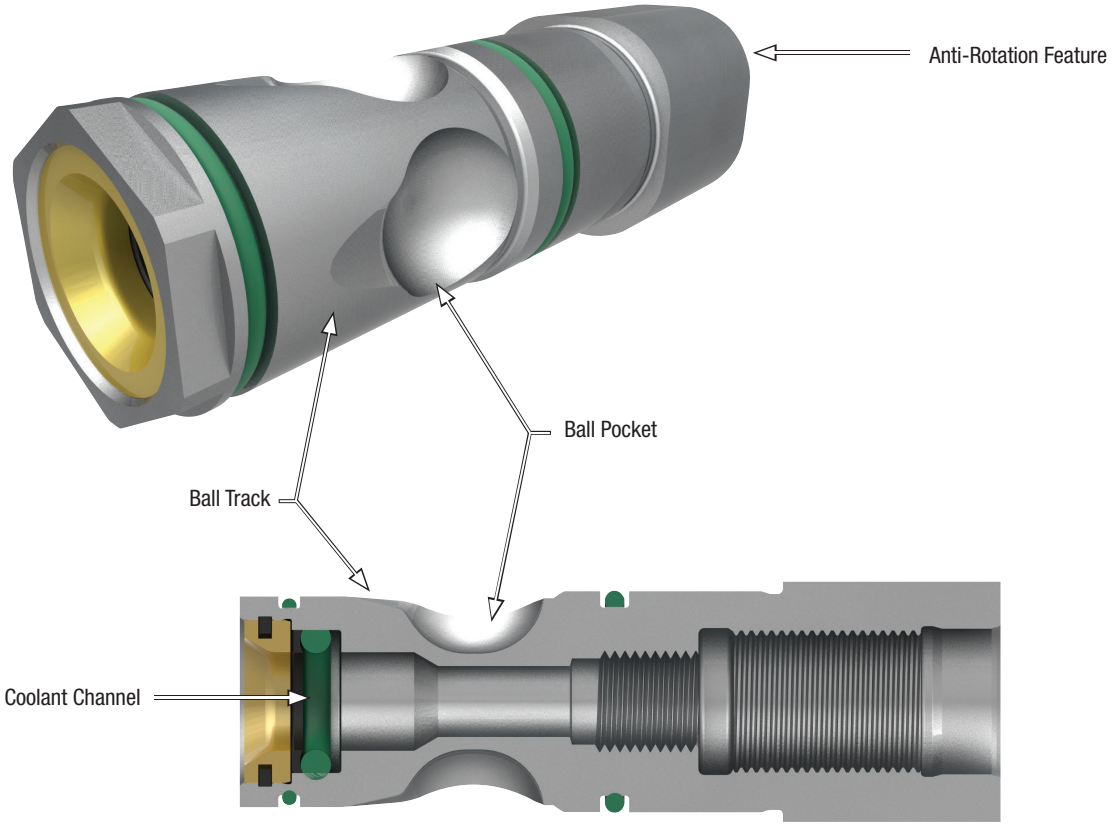

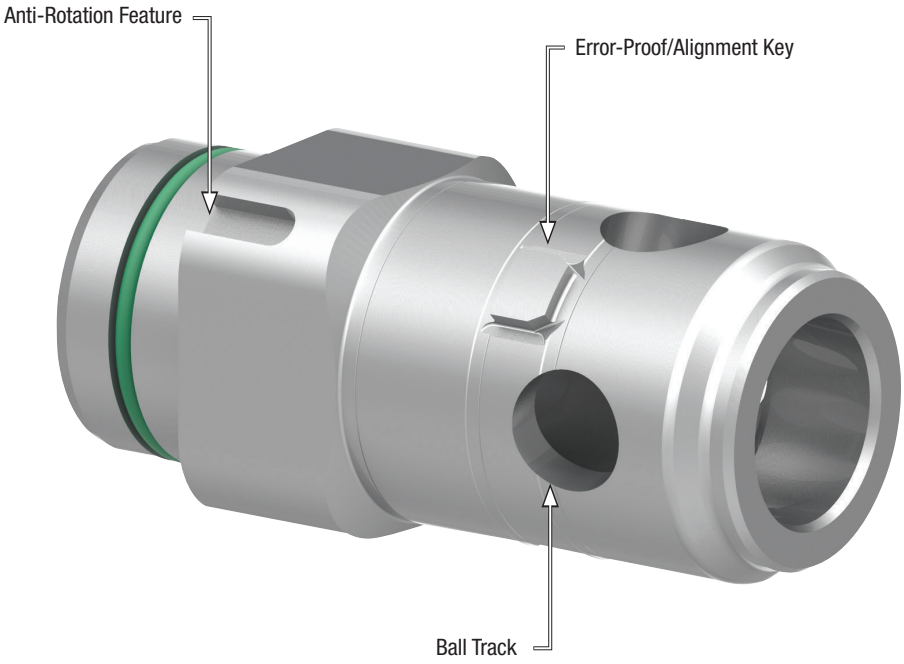

(continued)

(2.1 Features — continued)

What are the various geometric features of the clamping system?

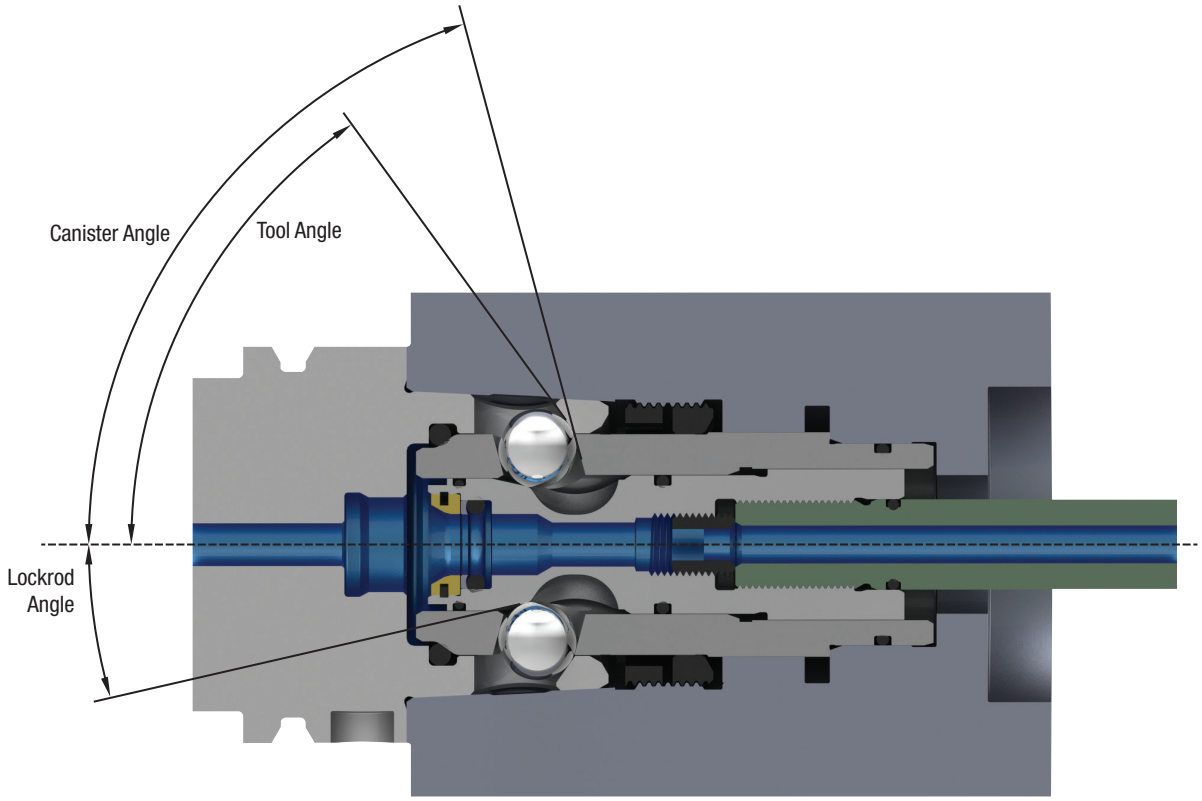

	Lockrod Angle	Canister Angle	Tool Angle
KM4X63	12.5	75	55
KM4X100	12	80	60
KM4X125	12	80	60

Lockrod ramp and canister angles will affect the mechanical advantage by changing the ratio between the radial displacement of the locking elements (balls) and the axial displacement of the lockrod.

2.2 Component List

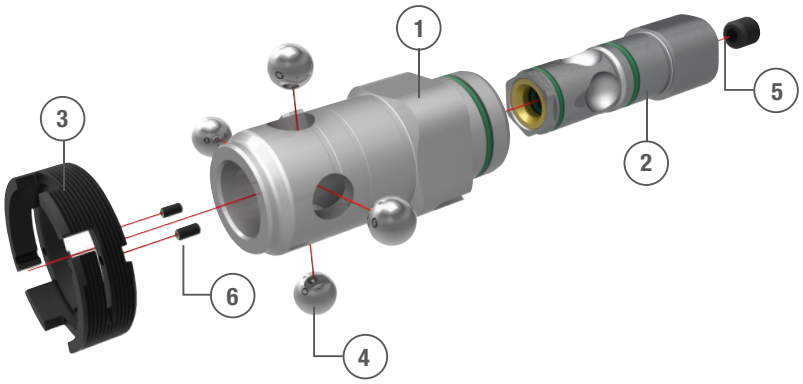

Main Components • Order Number

	Component	KM4X63	KM4X100	KM4X125
*	Spindle Component Set	6241045	6241047	–
1	Canister	–	–	5635347
2	Lockrod	–	–	5635348
3	Canister Ring	–	–	5635349
4	Locking Ball	–	–	5701919
5	Lockrod Set Screw	–	–	5635362
6	Set Screw	–	–	5701940

NOTE: Spindle component set contains items 1–13.

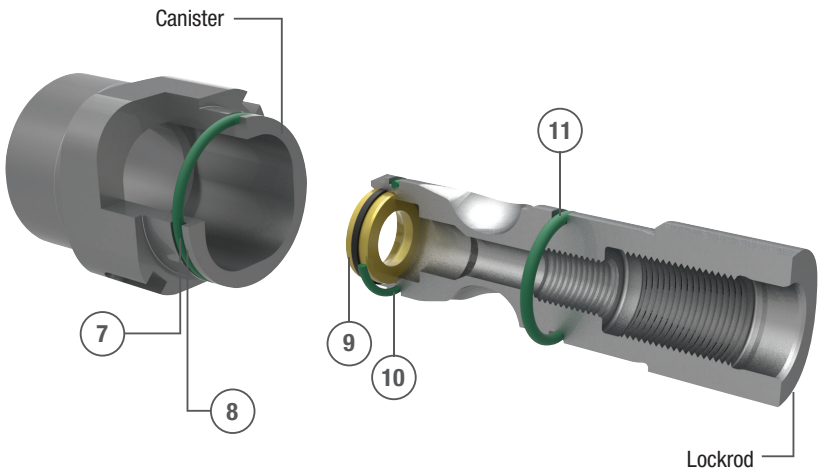

O-Ring/Seals • Order Number

	Component	KM4X63	KM4X100	KM4X125
*	Repair Package	6241046	6241048	–
7	Canister O-Ring	–	–	5111548
8	Canister Backup Ring	–	–	5701941
9	Lockrod O-Ring	–	–	3858207
10	Lockrod Backup O-Ring	–	–	–
11	Rear Lockrod O-Ring	–	–	2042999
12	HP Coolant O-Ring	–	–	1150482
13	HP Coolant Backup Ring	–	–	2042999

NOTE: Standard repair package contains items 7–13; items 12 and 13 are not shown.

2.3 Spindle Accessories

Accessory	KM4X63	KM4X100	KM4X125
Clamping Force Meter Adapter 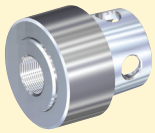	6195752	6195753	6195754
Balancing Plug 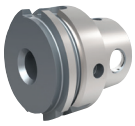	5548441	6064389	6064132
Gage Bar 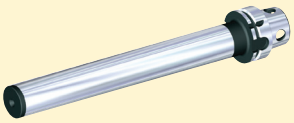	5477456 5552461 5552462	4160529	5636974
Canister Removal Tool 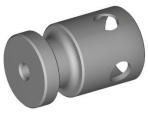	5701918	6064492	6064493
Clamping Force Meter 	OTT Power Check II 0-75kN 95.103.1 36.9.2 M16		OTT Power Check II 25-200kN 95.103.137.9.2 M35
Spindle Assembly Tool 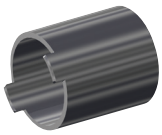	5701917	5500757	5635361
ATC Alignment Tool 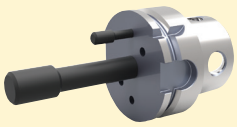	5477455	5555435	5636975
Min. Max. Tool 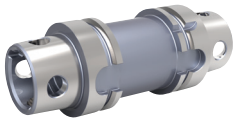	5477453	5555434	6064494
Centerline Tool 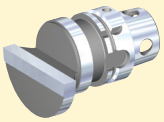	5477452	5555433	6247267
Spindle Wiper 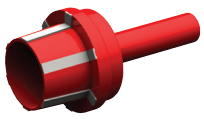	6127226	6127227	6127228

3. Operations

3.1 Clamping Sequence

1. Initial position: In this position, a tool can be inserted.

- The drawbar is actuated to the released position, allowing the locking balls to drop into their pockets on the lockrod.
- The tool is inserted into the spindle until its inner face contacts the lockrod.
- There is no face or taper contact in this position.

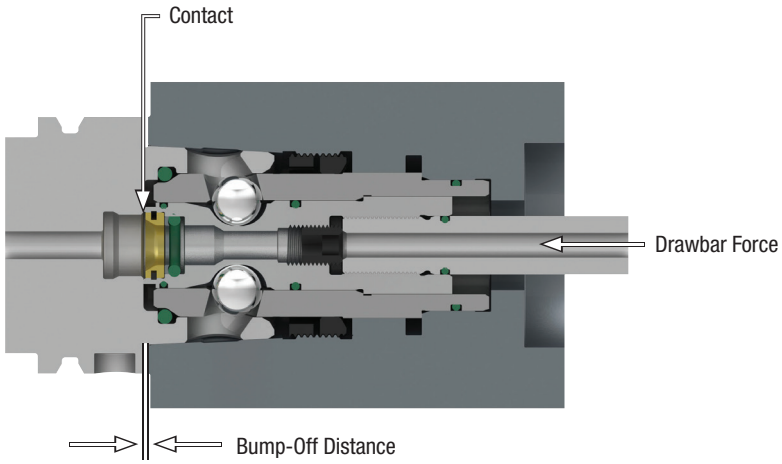

2. First contact position: In this position, the clamping components make their first contact with the taper of the tool.

- The drawbar begins to retract, causing the locking balls to climb out of their pockets and begin traveling onto the lockrod ramps.
- As the locking balls rise, they begin to draw the tool into the taper.
- Stand-off is the distance between the two gage faces when the two tapers make first contact. This gap is a result of the interference between the two tapers.

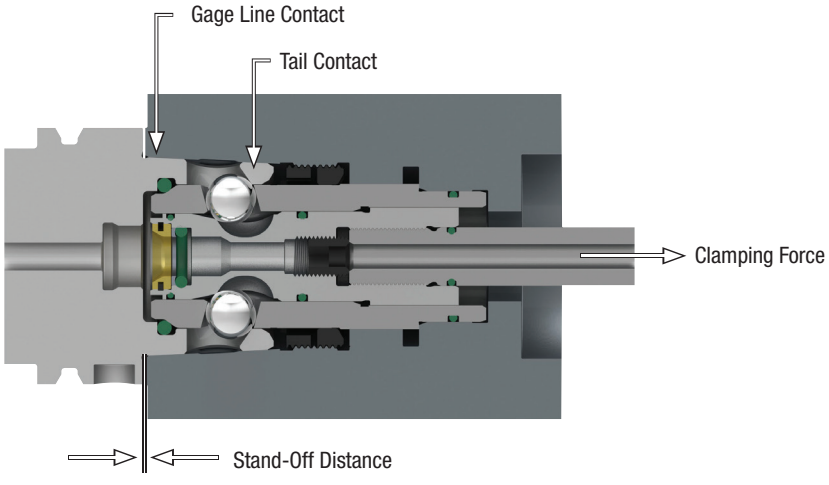

(continued)

(3.1 Clamping Sequence — continued)

3. Locked position: In this position, the tool is drawn into the spindle and the clamping system is no longer moving.

- The drawbar continues to retract, causing the tool to be pulled farther into the spindle.
- Three areas of contact are created; two on the taper and the third on the face.

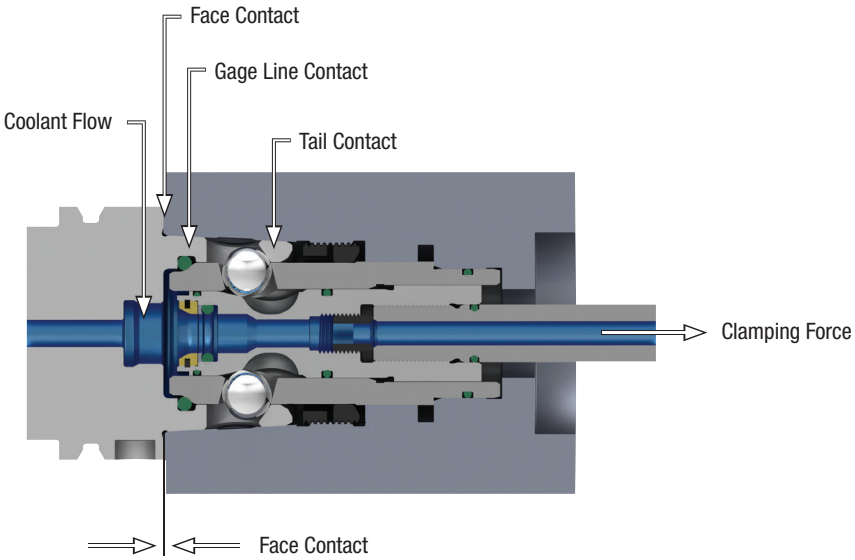

4. Tool Release: In this position, the clamping components have moved to the release position and the lockrod has moved forward to bump off the tool.

- The drawbar is actuated to the released position, allowing the locking balls to drop into their pockets on the lockrod.
- The lockrod pushes the tool out of the spindle.
- There is no face or taper contact in this position and the tool is free to be removed from the machine.

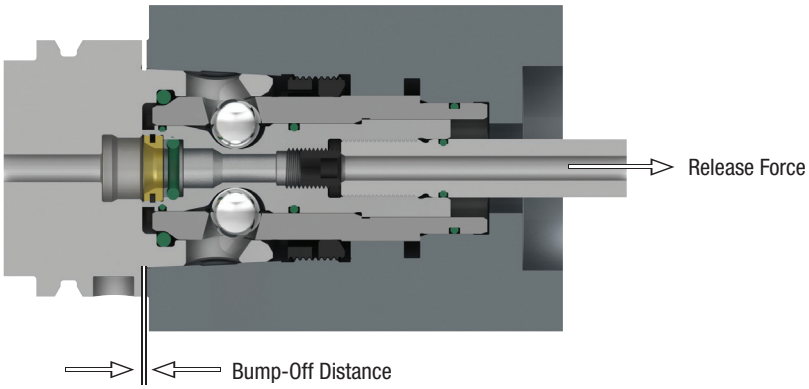

3.2 Coolant Capability

Through-the-tool coolant is standard with all KM4X™ toolholders. The coolant enters through the center of the drawbar and flows to the tool via the lockrod.

Standard Design Coolant

The standard KM4X™ system is capable of 1500 psi [100 bar] coolant through the tool.

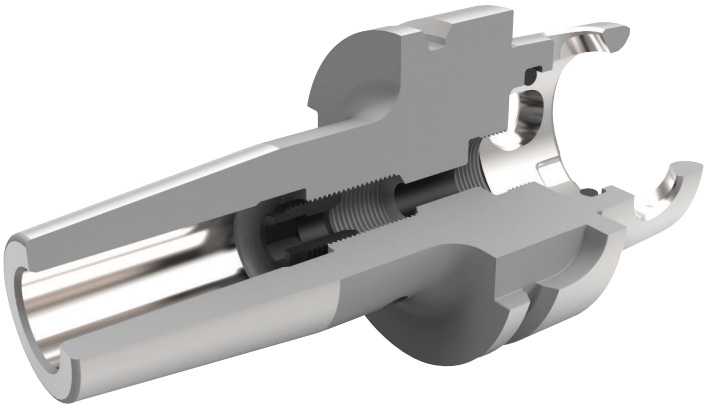

Taper O-Ring

System	Catalog Number	Order Number
KM4X63	OR01234139V90	1608616
KM4X100	OR01850210V90	1608617
KM4X125	OR02475210V90	5478334

Standard Design With High-Pressure Coolant

With the addition of the high-pressure coolant assembly, the maximum coolant pressure can be increased to 3000 psi [200 bar].

To install, simply thread the complete assembly into the existing threaded hole inside the tool's taper.

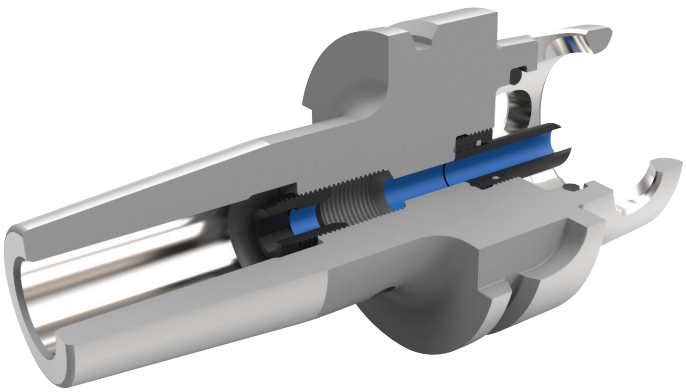

System	High-Pressure Coolant Assembly	Coolant Assembly Wrench
KM4X63	5572428	1132992
KM4X100	5572427	1127524
KM4X125	5572426	1132993

4. Technical Specifications

4.1 System Specifications

System Size	KM4X63	KM4X100	KM4X125
Flange Diameter (mm)	63	100	125
Taper Gage Diameter (mm)	48,026	75,043	95,054
Flange Thickness (mm)	25	29	29
Taper Length (mm)	32	50	63
Taper Ratio	10:1	10:1	10:1
Nominal Interference Diameter (mm)	0,022	0,046	0,058
Stand-Off Range (mm)	0,16–0,28	0,38–0,54	0,49–0,67
Maximum Bending Moment, Static (Nm)[1]	2100	6000	9000
Maximum Torque, Static (Nm)[1]	1700	5500	8000
Maximum RPM[2]	30000	21400	16700
Clamping Force Range (kN)[3]	36–58	90–110	135–165
Minimum Drawbar Force (kN)[3]	7.5	18	27
KM4X Taper Release Force (kN)[4]	12	25,3	40
Mechanical Advantage	4,8:1	5,0:1	5,0:1
Total Stroke (mm)	9,5	13	16,3
Nominal Bump-off Position (mm)[5]	1	1,2	1,5
Point of First Tangency (mm)[6]	4,0	6,8	8,5
Theoretical Clamping Position (mm)[7]	5,0	8	10
End of Stroke Position (mm)[8]	8,5	11,8	14,8
Radial Repeatability (mm)	0,0025	0,0025	0,003
Axial Repeatability (mm)	0,002	0,002	0,002
Maximum Coolant Pressure (bar)[9]	200	200	200
Through Coolant Hole Diameter (mm)	7	10	16

[1] Only 60–80% of the static limits should be used in real conditions.

[2] Maximum rotational speed when spindle and tool tapers lose contact, calculated at minimum material condition for a generic spindle design. Actual results may vary.

[3] Clamping force should never be outside the recommended range. Minimum drawbar force is the minimum clamping force divided by the Mechanical Advantage (M.A.) and must be available for the entire stroke.

[4] Frictional force only (spring pack not included). May vary with lubricity condition, cleanliness, and taper interference. An additional 20% available reserve is recommended.

[5] The distance between the tool face and receptacle face when lockrod is in its most forward position.

[6] Point where the locking balls are making contact with the lockrod, canister, and cutting tool. The gap between the tool face and receptacle face is closed (no face contact pressure).

[7] Distance from spindle face to lockrod front face when fully clamped with tool in place. Value does not include component tolerances and will tend to increase with use. For reference only.

[8] Location of the lockrod when fully retracted with no tool in place.

[9] High-pressure coolant assembly (see section 3.2).

4.2 External Taper Specifications

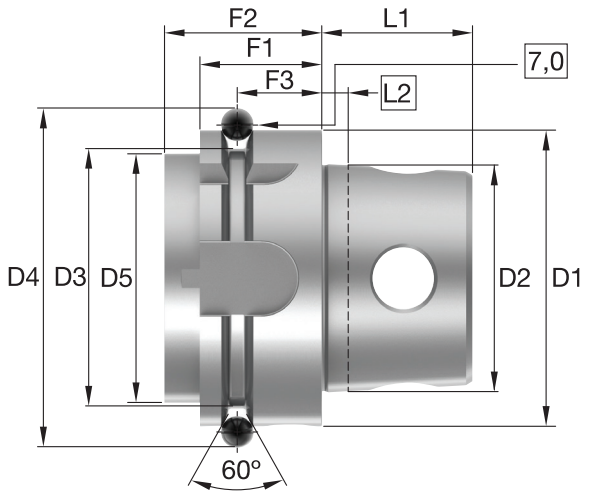

System Size	D1	D2	D3	D4	D5 (max)	F1	F2 (min)	F3	L1	L2
KM4X63	63,0	48,026	54,95	72,25	62,0	26,0	30,5	18,0	32,0	6,3
KM4X100	100,0	75,043	91,95	109,7	85,0	29,0	45,0	20,0	50,0	10,0
KM4X125	125,0	95,054	116,95	134,7	111,0	29,0	45,0	20,0	63,0	12,5

4.3 Internal Taper Specifications

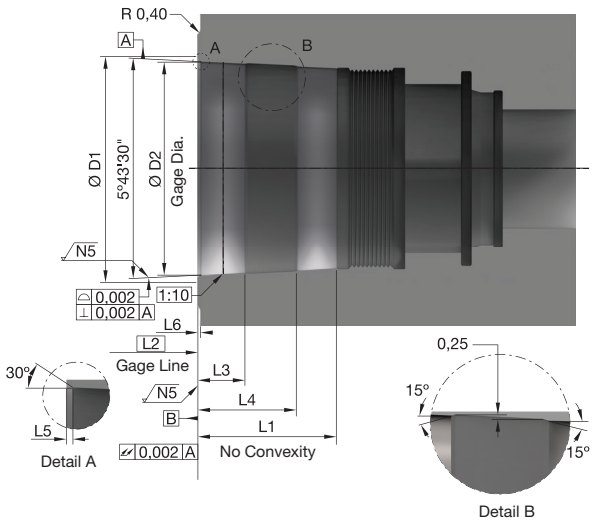

System Size	D1	D2	L1	L2	L3	L4	L5	L6
KM4X63	63	48,004	33	6,3	13	23	1	0,55
KM4X100	100	74,997	50	10	17,45	35,91	1,5	0,55
KM4X125	125	94,997	62,96	12,5	21	42	1,5	0,65

NOTE: Contact Kennametal for complete details.

4.4 Application Limits

The KM4X™ tooling connection is an extremely rigid and stable system that is specifically designed to supply consistent results. As with any mechanical coupling, the KM4X™ connection has limits that, if exceeded, could result in mechanical damage to the connection and/or its components. To help you stay within these limits, Kennametal has established operating regions for each system size. These regions are defined by the maximum torque capability and the maximum bending capability of each system size. At no point should the connection be used at the maximum static bending and maximum static torque conditions.

KM4X63 • Application Limits

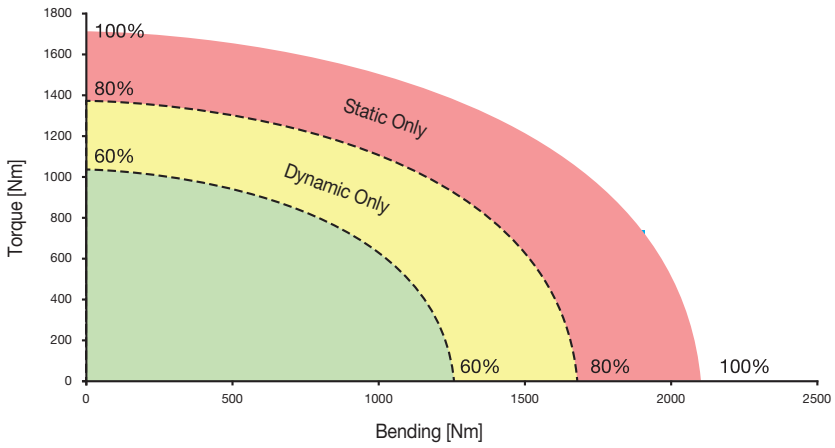

KM4X100 • Application Limits

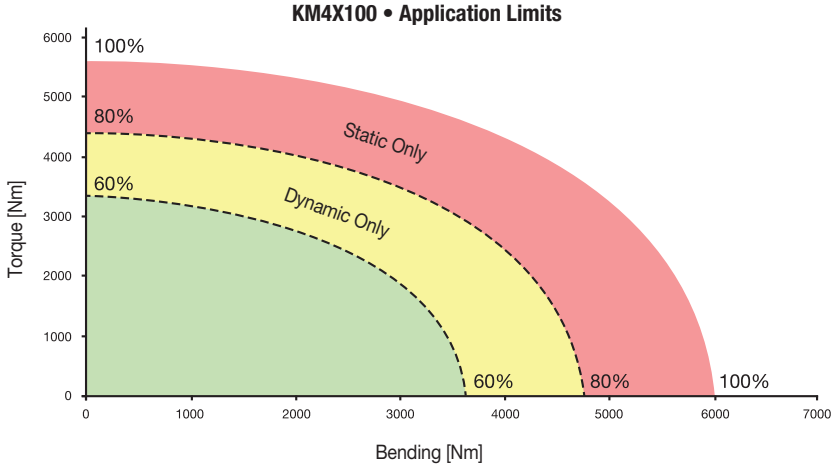

KM4X125 • Application Limits

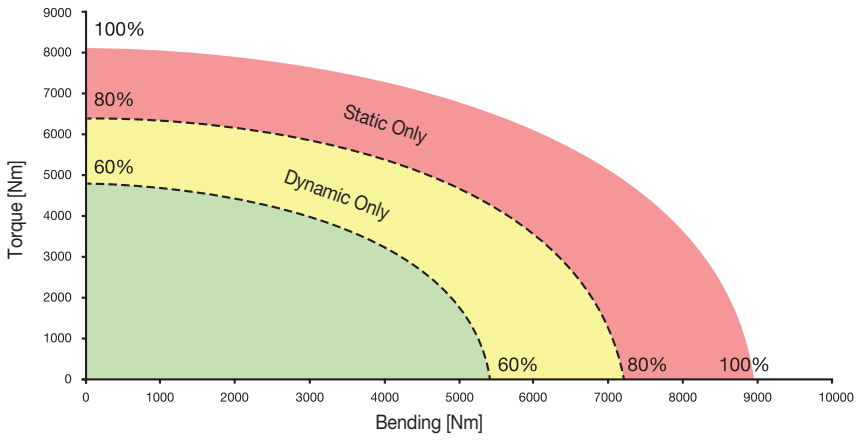

(continued)

(4.4 Application Limits — continued)

The KM4X™ tooling connection is an extremely rigid and stable system that is specifically designed to supply consistent results. As with any mechanical coupling, the KM4X™ connection has limits that, if exceeded, could result in mechanical damage to the connection and/or its components. To help you stay within these limits, Kennametal has established maximum safe tangential loads for each system size. These loads are described as a certain amount of force at a given "F" and "L1" dimension for each system size.

Maximum Tangential Load for KM4X63

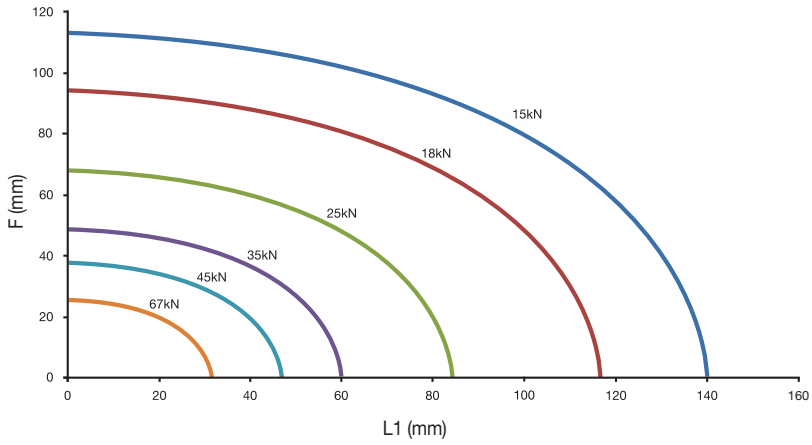

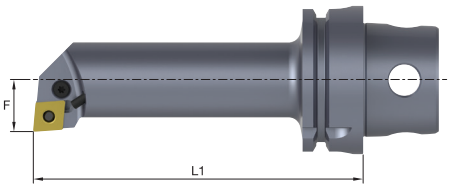

To account for load fluctuations in dynamic conditions, a force multiplier of 0,6 to 0,8 should be used.

L1 = Distance in millimeters from tool tip to face of clamping unit or spindle.
F = Distance in millimeters from tool tip to centerline of taper.
P = Maximum static tangential force in newtons.

$$P = \frac{1700000}{\sqrt{(0.81L1)^2 + F^2}}$$

Maximum Tangential Load for KM4X100

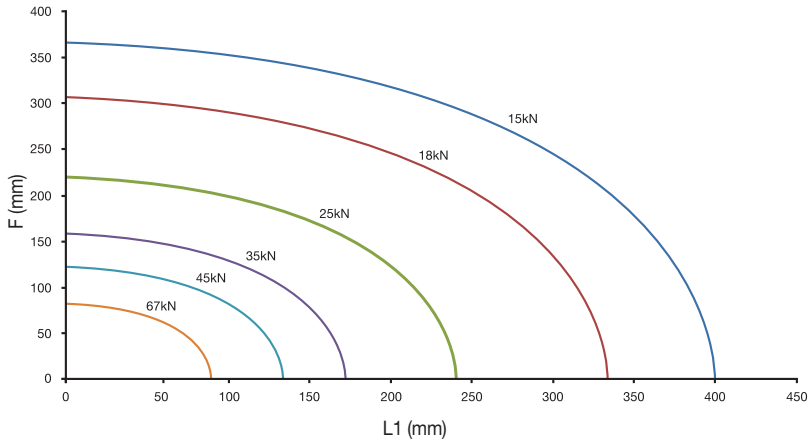

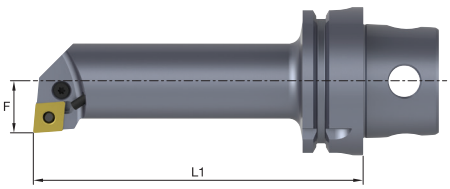

To account for load fluctuations in dynamic conditions, a force multiplier of 0,6 to 0,8 should be used.

L1 = Distance in millimeters from tool tip to face of clamping unit or spindle.
F = Distance in millimeters from tool tip to centerline of taper.
P = Maximum static tangential force in newtons.

$$P = \frac{5500000}{\sqrt{(0.92L1)^2 + F^2}}$$

(continued)

(4.4 Application Limits — continued)

Maximum Tangential Load for KM4X125

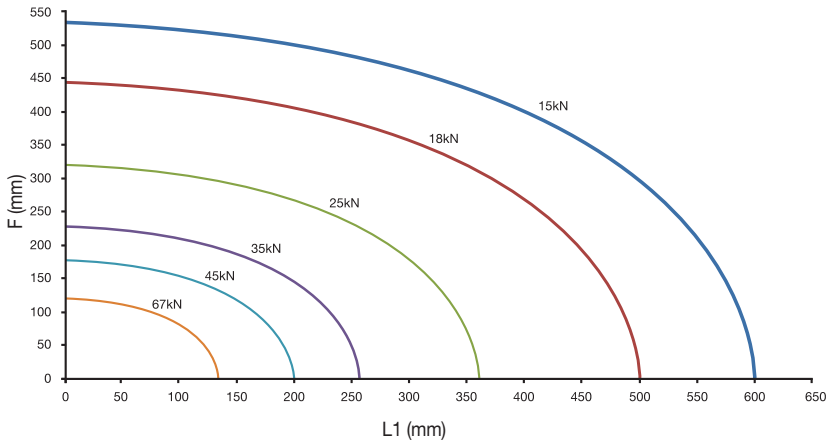

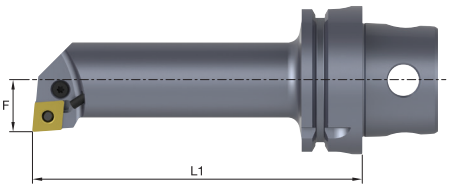

To account for load fluctuations in dynamic conditions, a force multiplier of 0,6 to 0,8 should be used.

L1 = Distance in millimeters from tool tip to face of clamping unit or spindle.
F = Distance in millimeters from tool tip to centerline of taper.
P = Maximum static tangential force in newtons.

$$P = \frac{8000000}{\sqrt{(0.89L1)^2 + F^2}}$$

4.5 Application Limits • Example

Maximum Tangential Load for KM4X63

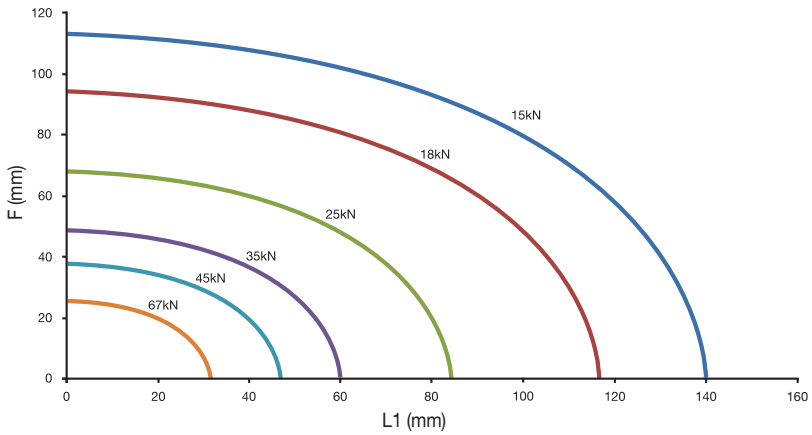

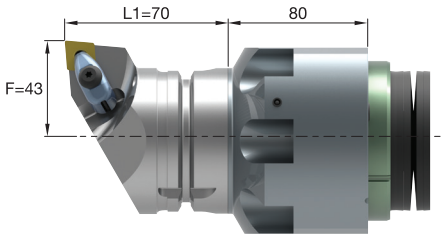

$$P = \frac{1700000}{\sqrt{(0.81L1)^2 + F^2}}$$

⇐ Equation provided on page C15 for KM4X63.
(Only for KM™ and KM4X™. Varies by system and size.)

$$P = \frac{1700000}{\sqrt{(0{,}81 * (70))^2 + (43)^2}} = 23889{,}5\ \text{N}$$

⇐ Maximum **static** tangential load.

$$23889{,}5\text{N} * 0{,}6 = 14333{,}7\text{N}$$

⇐ Apply a factor of 60–80% to account for **dynamic** conditions experienced during actual cutting. 60% is used in this example as a worst-case scenario.

5. Spindle Design

5.1 Drawbar Connection

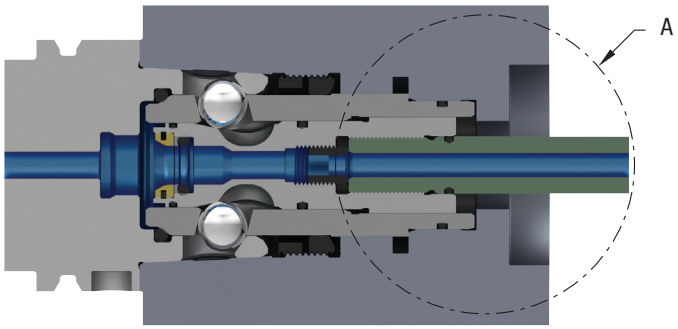

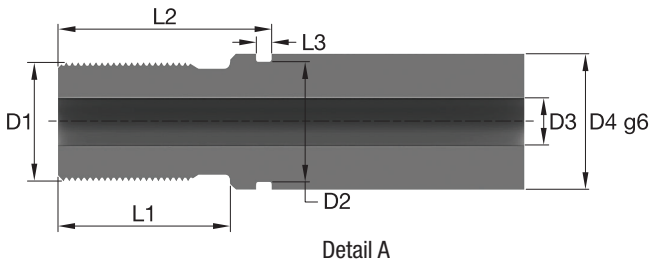

Detail A

System Size	D1	D2	D3	D4	L1	L2	L3	O-Ring
KM4X63	M14 x 1	12,15	6	14,3	21,5	26	2,1	11 x 1,5
KM4X100	M20 x 1	19,25	10	23	29	36	3,4	18 x 2,5
KM4X125	M24 x 1,5	24,95	16	28,7	39	46	3,4	24 x 2,5

NOTE: O-Ring: Viton, 80 Shore A.
* This configuration is a suggestion, not a requirement.

5.2 Spring Pack Design

Spring selection should follow the basic guidelines below:

- Use the largest possible diameter to increase fatigue life and reduce spring pack length.
- For a given disc spring diameter and thickness, the longer the stack, the longer the life.
- Parallel stacking (spring sets in series) allows for shorter spring packs and higher spring force; however, a friction factor is introduced between the springs.
- Maximum number of springs stacked in parallel should be three, unless specified otherwise.
- Larger number of sets reduces spring pack force at tool release.
- Spring pack force at the “clamped without tool” position should be greater than or equal to the minimum clamping force divided by the mechanical advantage.
- Spring pack force at the clamped position should be greater than or equal to the nominal clamping force divided by the mechanical advantage.

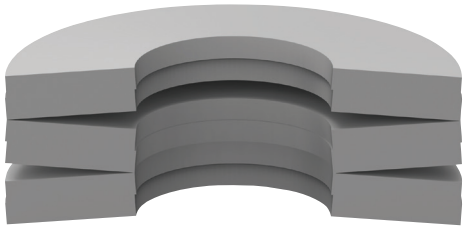

This is a representation of three sets of springs that have two springs in parallel.

5.3 Spring Pack Design Example for KM4X100

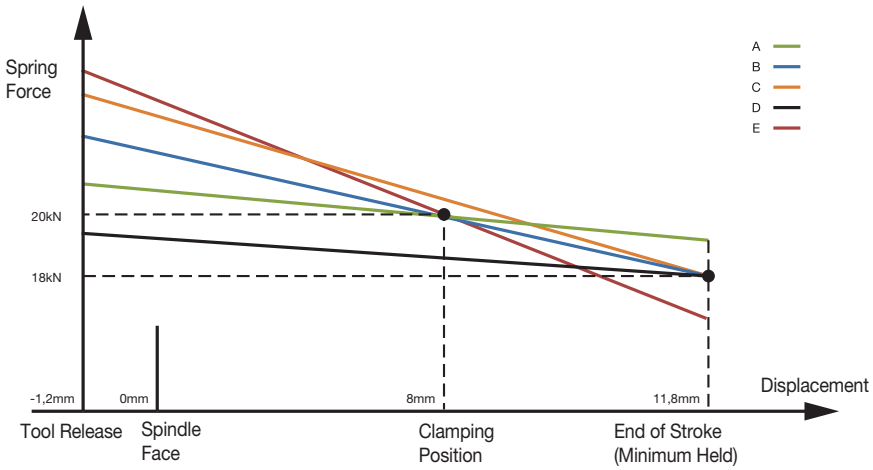

Design A: Preferred design. Less variation in clamping force and lower force at tool release position; 20kN at clamping position and more than 18kN at the end of stroke (minimum held). Longer spring life than designs B, C, and E.

Design B: Good solution. 20kN at clamping position and 18kN at end of stroke.

Design C: Higher resultant spring constant. Designed to provide 18kN at the end of the stroke (required), providing higher than nominal clamping force and higher force at tool release. Lower spring life, but also good design.

Design D: Designed to provide 18kN at the end of the stroke (required), providing lower than nominal clamping force at clamping position and low force at tool release. Highest spring fatigue life. Acceptable solution when clamping force is not a major concern. Longest spring life.

Design E: Nominal clamping force achieved at clamping position, but resultant spring constant (stiffness) is excessive and minimum force at the end of the stroke cannot be achieved. Low spring life and high spring force at tool release position. This design must be avoided.

6. Instructions

6.1 Pre-Installation Checklist

1. Safety

❑ Review location specific safety regulations prior to any work.

2. Mechanical

❑ Components are clean and free of contaminates, burs, and chips.

❑ Component set is complete.

❑ The female taper is manufactured according to specification.

❑ All required assembly and inspection tools are readily available.

3. Electrical

❑ Ensure that the external power supply is correctly connected to the spindle.

4. Hydraulic

❑ Hydraulic oil is according to specification.

❑ Pressure set to recommendation.

5. Pneumatic

❑ Pressure set to recommendation.

6. Coolant

❑ Corrosion protection according to DIN 51360 section 2: 2 hours.

❑ Elastomer Compatibility — no change to shore hardness and/or elongation.

❑ Non-ferrous metal compatibility; no corrosion on copper, brass, and aluminum parts.

❑ Glue residue after slow evaporation at 50°. Non-sticky. No residue. Easily removable.

6.2 Installation

1. Insert the canister into the spindle. Check distance “A” from the gage face. Remove the canister.

	Distance “A”	
System Size	**Min (mm)**	**Max (mm)**
KM4X63	1,35	1,65
KM4X100	1,10	1,40
KM4X125	1,41	1,71

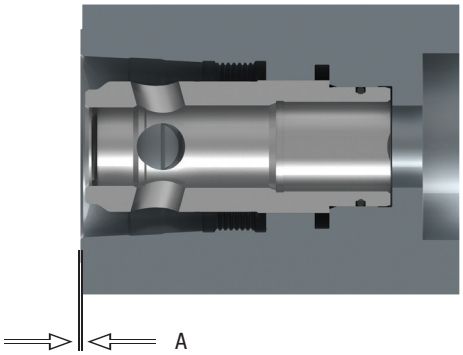

2. Extend the drawbar to the tool release position.

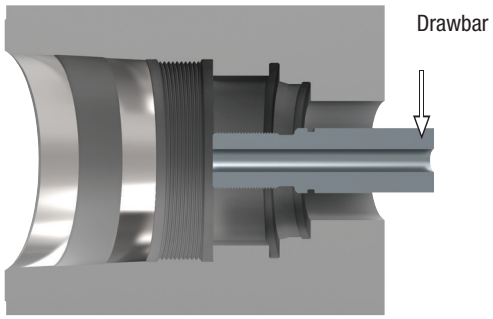

3. Grease the O-rings and backup rings with Kluber Paste ME 31–52, then install on the lockrod. Mount the lockrod set screw into the lockrod making sure it seats in the bottom of the threaded hole. For maximum coolant flow, do not install the locknut set screw. Coat the entire outside surface of the lockrod with grease using a coarse-bristled assembly brush. This should include ball depression areas and O-rings.

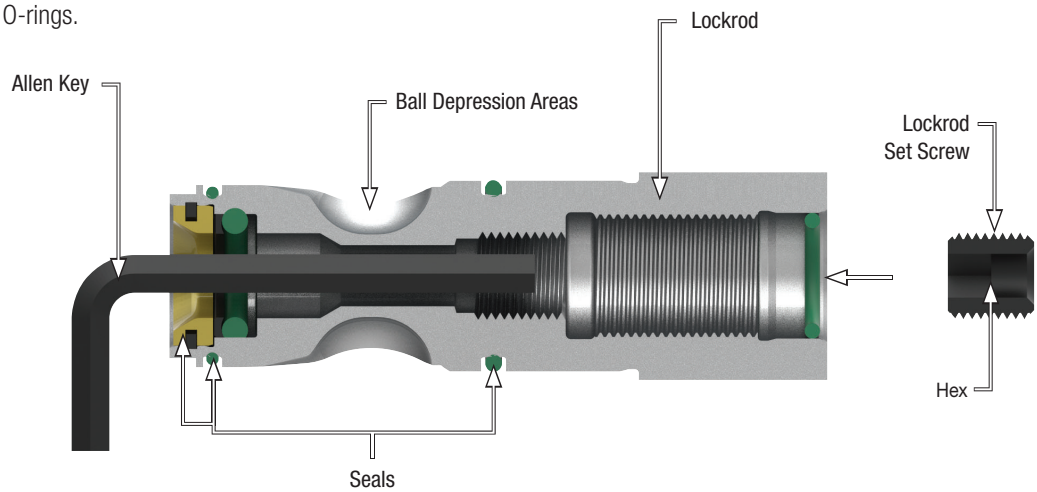

System Size	Allen Size (mm)
KM4X63	5,00
KM4X100	8,00
KM4X125	10,00

(continued)

(6.2 Installation — continued)

4. Thread the lockrod on to the extended drawbar. The end of the lockrod should extend distance “B” beyond the spindle gage face.

Distance “B”

System Size	Min (mm)	Max (mm)
KM4X63	0,9	1,1
KM4X100	1,1	1,3
KM4X125	1,4	1,6

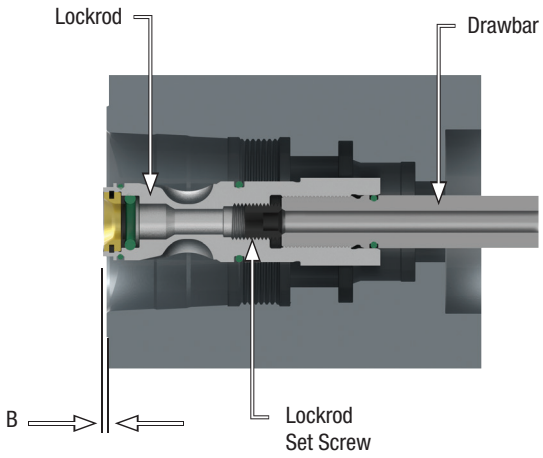

5. Move the drawbar to the “clamped without tool” position and verify that the end of stroke position is achieved, then check distance “C”. Move the drawbar to the “tool release position” again before proceeding to the next step.

Distance “C”

System Size	Min (mm)	Max (mm)
KM4X63	8,4	8,6
KM4X100	11,7	11,9
KM4X125	14,7	14,9

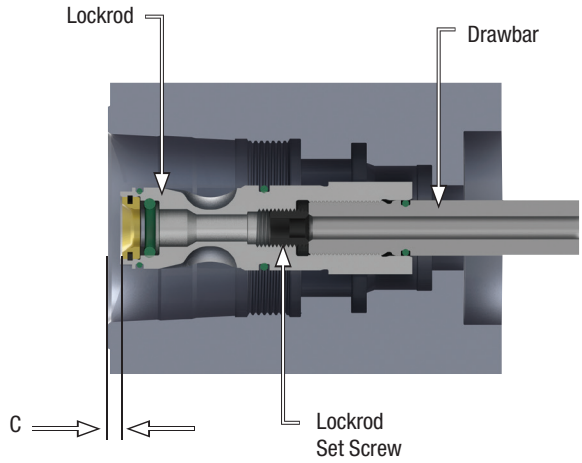

6. Install the canister seals, and apply Kluber Paste ME 31–52 grease to the seals, the canister’s ball track holes and all internal surfaces of the canister.

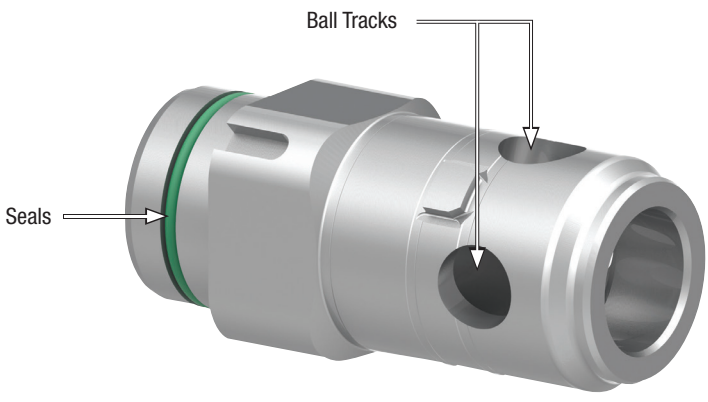

(6.2 Installation — continued)

7. Evenly coat the (4) locking balls with grease. Position the canister inside the canister removal tool (see spindle accessories, page C8) and insert the (4) locking balls into their respective holes in the canister and canister removal tool.

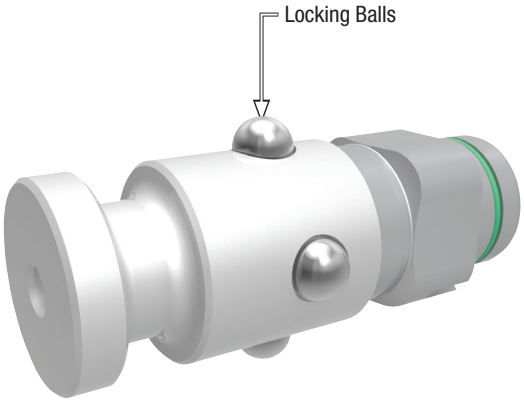

8. Slide the canister into the spindle to its final mounted position in the spindle bore (bottom of anti-rotation feature). It may be necessary to move the canister slightly in a radial direction to line up the canister's anti-rotation feature. Rotate the canister removal tool to unlock it from the canister and remove the tool.

   * In case the canister needs to be removed, it is recommended to use the canister removal tool. Insert the canister removal tool over the canister, aligning the slot with the canister key until it stops, then rotate it counterclockwise to engage with the canister key. Pull the canister removal tool straight out. This tool is designed to interlock with the error-proof/ alignment feature on the canister.

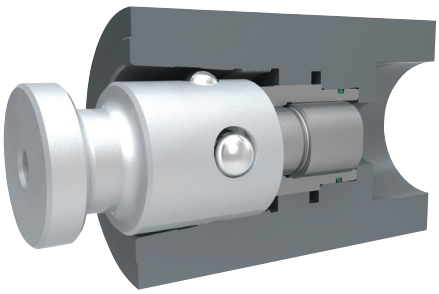

9. Loosen, but do not remove, the (2) set screws from the canister lock ring. Apply anti-seize to threads on canister lock ring.

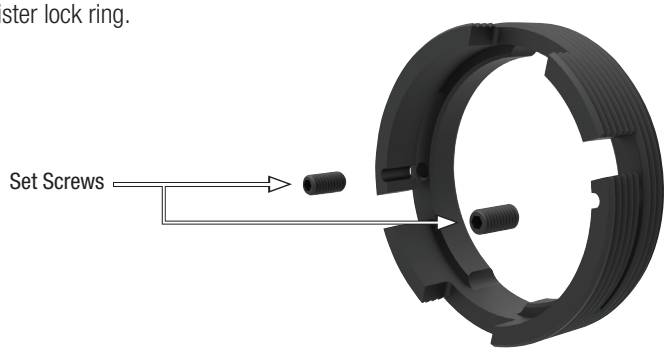

10. Slide the canister lock ring over the canister. To put it in contact with the internal spindle threads, it may be necessary to use the spindle assembly tool to spin the canister lock ring until it lines up with the error-proof/alignment key on the canister. Once the canister lock ring is lined up, it can be pushed back into contact with the internal spindle threads. You may then begin to tighten the ring with the spindle assembly tool.

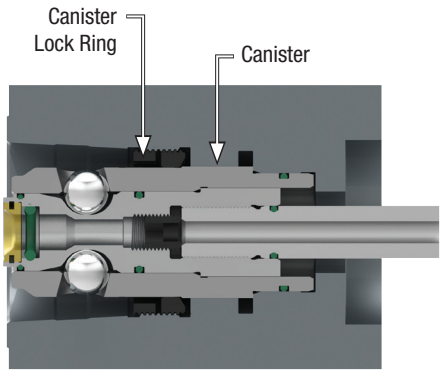

(continued)

(6.2 Installation — continued)

11. Using the spindle assembly tool and a qualified torque wrench, tighten the canister lock ring in a clockwise direction until you reach the torque listed below. Once torqued to the correct value, tighten the (2) set screws into the canister ring to lock the ring in place. For KM4X100 and KM4X125, the set screws can be tightened by turning them clockwise while KM4X63 requires the screws to be turned counterclockwise to tighten. Cycle the spindle approximately 10 times to ensure proper seating.



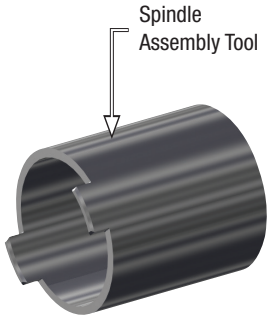

Canister Ring Tightening Torque

System Size	Torque (Nm)
KM4X63	75
KM4X100	200
KM4X125	350

System Size	Allen Size (mm)
KM4X63	1,50
KM4X100	2,00
KM4X125	2,00

12. With the canister properly seated, the distance (A) from the spindle gage face to the front nose of the canister should be as listed below. Compare with your results from step 1 to ensure that the lockrod is not holding the canister outward.

* If “A” is too small, it is possible that the lockrod is holding the canister outward. Try retightening the canister ring with the drawbar in the “clamped without tool” position.

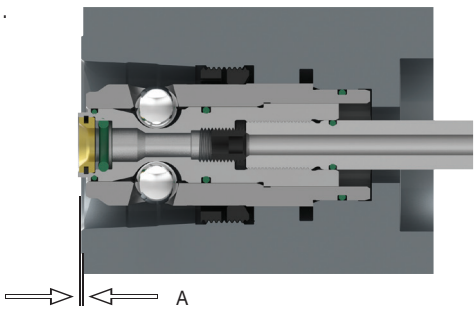

	Distance “A”	
System Size	Min (mm)	Max (mm)
KM4X63	1,35	1,65
KM4X100	1,10	1,40
KM4X125	1,41	1,71

13. Clamp the minimum and maximum gage in the spindle. Use a depth micrometer to measure from the end of the plug, through the hole, to the face of the lockrod. Subtract the thickness of the plug flange from this measurement to find the clamped position of the lockrod relative to the face of the spindle.

See below for suggested clamping positions:

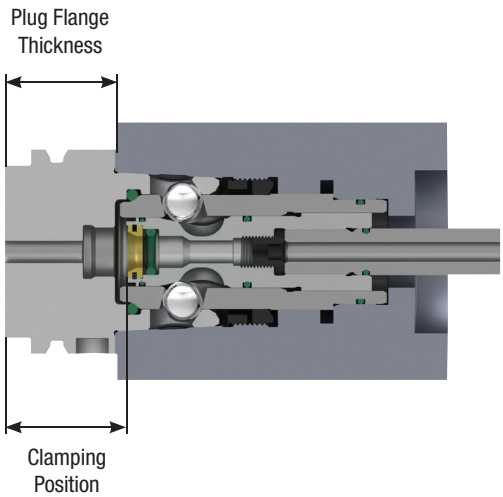

Lockrod Position without Plug

System Size	Min (mm)	Max (mm)
KM4X63	4,5	7,0
KM4X100	7,0	8,5
KM4X125	8,0	10,0

NOTE: Recorded values should be greater than the minimum and less than the maximum.

(6.2 Installation — continued)

14. If the clamping location is not acceptable, adjustments to the canister position "A" will be necessary. To do so, remove the clamping components (see section 6.2). If the lockrod is clamping at a distance greater than the maximum, material needs removed from the canister to move the canister farther into the spindle. If the lockrod is clamping at a distance less than the minimum, a shim is needed to move the canister toward the spindle face. The chart below shows an approximate amount of clamping position change with 0.1mm change in shim thickness. After making adjustments, reassemble and repeat measurements. The shim stock can be ground to a custom thickness.

System Size	Clamping Position Change* (mm)	Shim Order Number
KM4X63	0,85	**5701914**
KM4X100	1,00	**5413745**
KM4X125	1,00	**5635360**

* Lockrod clamping position change with 0,1mm change in shim thickness.

15. With the plug clamped, use an Allen wrench (size 5mm for KM4X63, 8mm for KM4X100, and 10mm for KM4X125) to tighten the lockrod set screw.

System Size	Allen Size (mm)	Torque (Nm)
KM4X63	5,00	25,00
KM4X100	8,00	50,00
KM4X125	10,00	75,00

16. Using the OTT® PowerCheck II clamping force meter and KM4X™ taper/collar adapter, measure the clamping force. Measurements should be recorded after 60 seconds. If the clamping force is not within the ranges provided, the clamping position may still need to be adjusted.

	KM4X63	KM4X100	KM4X125
Clamping Force Range (kN)	36–58	90–110	135–165



6.3. Disassembly Instructions

1. Remove tool from spindle.
2. Clean spindle with clean wipe or spindle wiper.
3. Loosen, but do not remove, the (2) set screws from the canister ring.
4. Using the spindle assembly tool, loosen and remove the canister ring.
   An Allen wrench can be used with the set screws to assist in removal.
   NOTE: The canister ring must pass over the error-proof/alignment feature on the canister.
5. Move lockrod to “tool release” position.
6. Use the canister removal tool to pull the canister and locking balls out of the spindle.
7. Unscrew the lockrod using the lockrod set screw or the hex feature on the lockrod.
   NOTE: The lockrod set screw will eventually stop against the lockrod, keep turning to remove the lockrod.

6.4. Maintenance

- Poor maintenance can lead to spindle damage. Regular preventative maintenance can help prolong the life of the tooling connection. If service is required, ensure that it is done in a clean environment as foreign contaminants can have detrimental effect on clamping components. The following steps can prolong the life of spindle components:
  - Use a clean wipe or spindle wiper to clean the internal taper. (Compressed air should not be used as it may force debris into the ball pockets).
  - Regularly clean tools, tool holders, and tool tapers.
  - Check the level and quality of the spindle lubricant and coolant.
  - Balance your tools.
  - Cotton swabs can be used weekly to add grease to the balls when the clamping mechanism is in the “clamped without tool” position.
  - The clamping force should be checked monthly in accordance with Kennametal procedure KCT0750. Reference assembly step 16.
  - The clamping position should be checked monthly. Reference assembly step 4,12, and 13.
- If a major issue arises, completely disassemble and reassemble the clamping components. Inspect for wear and fatigue of clamping components and seals. Order replacement parts as needed.
- In case of any damage, the exchange of the complete clamping set is recommended.
- If further assistance is needed, contact customer support.

7. Frequently Asked Questions

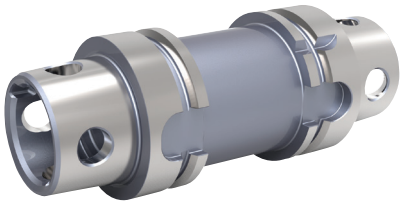

What is the min. max. tool?

One side of this tool is manufactured to the minimum material condition, while the other side to the maximum material condition. The machine tool builder can set the position of the sensors that check the “clamped with tool” position. It can also be used to check the lockrod position during clamping (see step 13 on page C23).

Attention: The “clamped with tool” position of the drawbar may vary over time due a normal movement of the clamping position on the ramp of the lockrod.

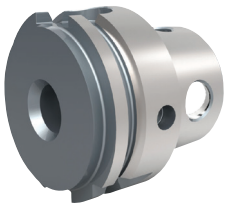

What is the balancing plug?

The balancing plug is designed to be used for two functions. Primarily, the balancing plug is used during troubleshooting to ensure that a spindle is in balance and that it is not causing any vibration. It can be used to test for coolant flow through the spindle.

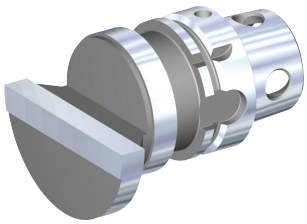

What is the Center Alignment Tool?

The center alignment tool is used to check the spindle center and spindle orientation. The tool can also be used to verify tool presetters. This gage is said to be a “universal” gage because it has so many practical uses.

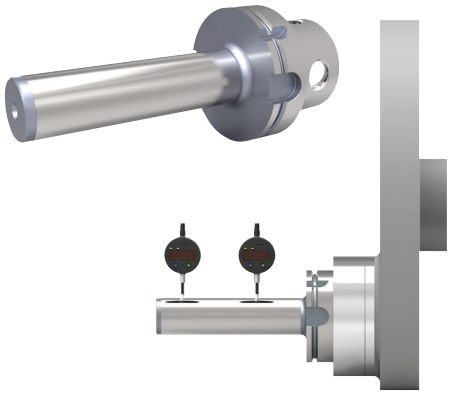

What is the gage bar and how do I use it?

A gage bar is used as a quick tool to ensure that a spindle is running accurately. This tool should be used during setup of a machine. It can also be used after a crash, and it is suggested that the gage bar be used as part of spindle maintenance. A gage bar is used for optimum machine accuracy. Components must be accurately positioned in the total machine process.The gage bar is used to set the centerline of the tool position and identify the runout of rotating spindles.

(continued)

(7. Frequently Asked Questions — continued)



What is the clamping force gage?

For safety and manintenance reasons, the clamping force should frequently be checked.

The clamping force gage is able to support each KM4X™ system size by using different KM4X™ clamping force adapters.

This handheld device is easy to insert into the machine spindle or clamping unit to directly read the total clamping force. It should be used to setup a new spindle, to qualify a crashed or rebuilt spindle, and for monthly spindle preventative maintanence.

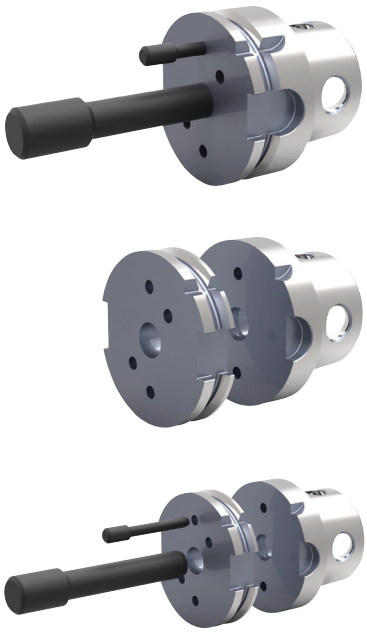

What is the ATC alignment tool?

The alignment tool is used to adjust the ATC gripper position with relation to the magazine and clamping unit or spindle. Improper alignment can affect repeatabilty of tools and result in abnormal wear.

To install the tool, clamp the male part into the spindle and place the gripper part into the ATC. Run the machine's ATC program until it reaches its final position in the tool change area.

Insert the centerline gage pin into the alignment tool. The alignment is correct when the pin passes through both halves. If not, adjust the spindle or ATC position. The two halves should be flush and parallel to each other.

With the centerline gage pin inserted, insert the angle gage pin. If the pin passes through both halves, the system is fully aligned. If not, adjust the ATC or spindle until the pin passes.

What do I do if my spindle experiences leakage issues?

If your spindle is leaking, disassemble the spindle and inspect the seals. Replace any compromised seals. Clean off the seals and re-lubricate. Reassemble the spindle and check for leaks. Contact customer support if problems persist.

(continued)

(7. Frequently Asked Questions — continued)



Are there any presetting devices equipped with KM4X™?

The following presetting adapters are available upon request:

System Size	Company	Order Number
KM4X63	Kelch®	5568445
	Zoller®	5696067
KM4X100	Zoller®	5537644
	Zoller®	5425500



Are there any balancing adapters for KM4X™?

The following balancing adapters are available through Haimer®.

System Size	Company	Item Number
KM4X63	Haimer®	80.261.KM63.4X
KM4X100	Haimer®	80.261.KM100.4X



What can I use to locate my workpiece position?

KM4X™ adapters with a Renishaw® probe allow users to check and measure the raw and finished workpieces at the machine.

System Size	Catalog Number	Probe Size	Order Number
KM4X63	KM4X63RP40042M	40	5990571
KM4X63	KM4X63RP60042M	60	5718464
KM4X100	KM4X100RP60045M	60	6198617
KM4X125	KM4X125RP60045M	60	6198618

(continued)

(7. Frequently Asked Questions — continued)



40 Size Probes

Renishaw® Probe	Repeatability (mm)	Probe Type	L1_ASSY KM4X63 (mm)	L1_ASSY KM4X100 (mm)	L1_ASSY KM4X125 (mm)
OLP40	0.001	Kinematic	100.3	–	–
OMP40-2	0.001	Kinematic	92.0	–	–
OMP40M	0.001-0.002	Kinematic	96.0	–	–
OMP400	0.00025	Rengage®	92.0	–	–
RLP40	0.001	Kinematic	93.0	–	–
RMP40	0.001	Kinematic	92.0	–	–
RMP40M	0.001-0.002	Kinematic	96.0	–	–

60 Size Probes

Renishaw® Probe	Repeatability (mm)	Probe Type	L1_ASSY KM4X63 (mm)	L1_ASSY KM4X100 (mm)	L1_ASSY KM4X125 (mm)
MP11	0.001	Kinematic	117.70	120.7	120.7
MP700	0.00025	Rengage®	157.70	160.7	160.7
OMP60	0.001	Kinematic	118.00	121.00	121.00
OMP60M	0.001–0.002	Kinematic	109.25	112.25	112.25
OMP600	0.00025	Rengage®	118.00	121.00	121.00
OSP60	0.001	Sprint	142.60	145.6	145.6
RMP60	0.001	Kinematic	118.00	121.00	121.00
RMP60M	0.001–0.002	Kinematic	109.25	112.25	112.25
RMP600	0.00025	Rengage®	118.57	121.57	121.57

(continued)

(7. Frequently Asked Questions — continued)

What is Mechanical Advantage?

In this example of a simple machine, work is the product of force and displacement. Work is described as the power needed to force an object to move a given linear distance.

(1) $W_1 = F * h$ In this example, the linear distance is (h).

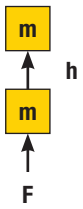

W = work

F = force

m = mass

h = height

(2) $W_2 = f * l$ Using an inclined plane as our example, we take notice of the work required to move a linear distance (l). Due to the distance (l) being more than (h), less force is required to move the same mass.

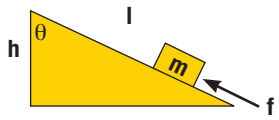

W = work

f = force

m = mass

h = height

l = linear distance traveled to achieve height

(3) $W_1 = W_2$ The work required to move the mass in example one equates to the force required to move the same mass in example 2.

(4) $F * h = f * l$ Substitute equations (1) and (2) into (3).

(5) $\frac{F}{f} = \frac{l}{h}$

(6) $\frac{F}{f} = MA$ In this example, mechanical advantage is defined as a multiplier used to relate two different forces.

(7) $MA = \frac{l}{h}$ That multiplier is governed by the ratio between length and height (or simply the angle created between the two).

(continued)

(7. Frequently Asked Questions — continued)

What is Mechanical Advantage?

Mechanical advantage is the ratio of the clamping force divided by the lockrod force. Where (f) is the lockrod force and (F) is the clamping force.

Within the KM4X™ system, there are 3 inclined planes (angles): the lockrod angle, the canister angle, and the tool angle.

What is the maximum coolant volume flow?

Using the equation below for volume flow and assuming a flow factor of 0.6 for an orifice, the table below can provide a rough estimate of maximum coolant flow (L/min).

$$Q = d^2 * \sqrt{P} * 0.659 * f$$

System Size	Diameter (mm)	Pressure (bar)				
		50	100	150	200	250
KM4X63	7	137	194	237	274	306
KM4X100	10	280	395	484	559	625
KM4X125	16	716	1012	1240	1432	1600

NOTE: These values are based on coolant diameter through the lockrod.

Could the maximum permissible contact pressure of the material be exceeded through the high clamping forces?

Based upon extensive calculations, the operating stresses for KM4X™ are well within the permissible limits.

(continued)

(7. Frequently Asked Questions — continued)

How many tool changes can be done until the ball track or the tool taper gets worn by the pressure and the friction?

In a typical setup, the springs of the drawbar will fatigue before wear or fatigue becomes an issue for the clamping components. KM4X™ has been tested with a clamping force over 15% of the maximum force. A life of about 1 million cycles was achieved without changing the tool or using grease.

The following are results from an independent cyclic test of KM4X100:

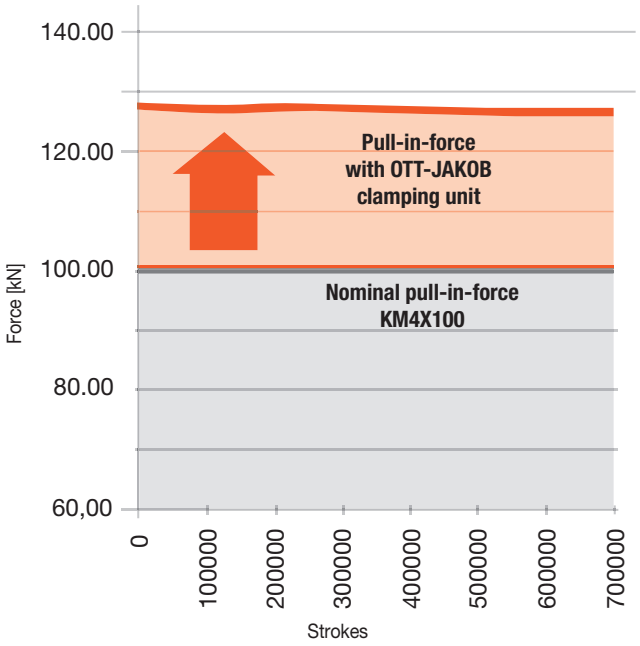

Why is the stiffness of KM4X™ higher in comparison to HSK?

The rigidity of the KM4X™ system is about 2.5 times higher than that of HSK. This is achieved by higher interference, higher clamping force, and the overall distribution of the interference zones.

On KM4X™ and KMTS™, the taper interference zones are split into two areas, providing better support. HSK appears to have a larger taper contact zone, but the contact happens on a much shorter taper. The keys on the spindle often force MTBs to use a design with clearance in the back of the HSK taper. This not only reduces the stiffness but also causes higher stresses internally on the taper in the corner where the fingers pull. HSK tapers can break off completely in that location during heavy duty applications.

(continued)

(7. Frequently Asked Questions — continued)

What do I do if I am concerned with spindle expansion?

Due to the taper interference and clamping force, as the tool is clamped there will be slight radial expansion of the spindle. The amount of expansion is dependent on the amount of interference, the clamping force, and design of the spindle.

Upon request, engineering support and estimations of spindle expansion can be provided for individual designs.

8. Glossary

Ball Track

Angled, cylindrical surface which is found on cutting units, the lockrods, and the canisters. These surfaces make contact with the locking balls.

Ball Track System

The combination of ball tracks found in the canister, lockrod, and cutting unit along with the locking balls. This provides the clamping force in the KM™ system. Elastic deformation of the ball tracks allow the locking forces to be spread out over a surface roughly assuming the shape of an oval, eliminating point contact with the locking balls.

Bump Off

The act of pushing a cutting unit out of a clamping unit. This is necessary due to the interference fit between the external and internal tapers of the system. The frontend of the lockrod pushes the cutting unit out of the clamping unit as it travels to its most forward position, "tool release".

Canister

A cylindrical component of the clamping mechanism whose function is to contain the lockrod and the locking balls. The canister is fixed within the clamping mechanism body and constrains the locking balls axially within the mechanism. The locking balls are contained in ball tracks located in a radial direction from the lockrod axis. The canister may also contain drive keys or positioning keys to correspond with slots in the KM™ cutting units.

Clamping Force

The axial force that pulls, or draws, a cutting unit into the clamping unit. This force is the product of the force applied to the lockrod and the mechanical advantage developed by the clamping mechanism.

Error Proofing

A feature based on the orientation key to ensure that a KM™ cutting unit can only be clamped in one radial orientation.

First Tangency

Point where the locking balls make first contact with the lockrod, canister, and cutting tool while clamping. The gap between the tool face and receptacle face is closed (no face contact pressure).

Fretting

A form of wear caused by repetitive movement between two contacting surfaces relative to each other. This results in the formation of micro cracks and rapid oxidation on the surface. In severe cases, the transfer of metal between the internal and external tapers will be seen. This can occur as a result of overloading the joint, severe or prolonged chatter, or low clamping force.

Interference Level

The difference between the gage diameters of a cutting unit's external taper and a clamping unit's internal taper.

KM™

The initials stand for Kennametal Modular. The first truly universal tooling system designed for use in all machine shop applications. Suitable for static and rotating tools on lathes, rotating tools on machining centers (including high speed), and modular machining center packages. It offers accuracy in all directions, rigidity and flexibility of application. It is based on a 1:10 taper with interference fit and is clamped with a ball track system. Developed jointly with Krupp WIDIA, it was first publicly displayed at the EMO show in Milan in 1987. It is currently offered in six sizes: KM32, KM40, KM50, KM63, KM80, and KM100.

KM4X™

The next generation of KM™, using the same ball track system design as current KM units. KM4X™ has 4 locking elements for better distribution of clamping force and rigidity. It is currently offered in three sizes: KM4X63, KM4X100, and KM4X125.

Locking Balls

Hardened precision chrome alloy steel ball used as part of the clamping mechanism to clamp a cutting unit.

(continued)

Lockrod

A cylindrical component contained in the canister as part of the clamping mechanism. It contains the ball tracks to drive the locking balls in an outward direction to clamp the cutting unit.

Lockrod Force

The force supplied to the lockrod to drive the locking balls and clamp a cutting unit. Lockrod force can be supplied in various ways. Screw threads, springs, hydraulic cylinders, and low-pressure air mechanisms have all been used to provide lockrod force.

Mechanical Advantage

The ratio of clamping force divided by lockrod force. The value for the mechanical advantage of a KM™ clamping unit is related to the cutting unit ball track angle, the canister ball track angle, and the lockrod ball track angle.

Minimum Held

Position where the lockrod is at its maximum displacement while retracting and springs are at minimum compression. Also referred to as the end of stroke position or “clamped without tool” position.

Orientation Key

A key like feature found on the canister that, in conjunction with the slot in a KM™ cutting unit, provides proper orientation of the cutting unit or tool before clamping.

Relieved Taper

The internal taper of a KM™ clamping unit has a relief machined into it that divides the taper into front and back ends. The relief serves two purposes: it is related to the ball track in the cutting unit so that the hole coming through the external taper does not scuff the internal taper. It also reduces the amount of taper contact between the two tapers allowing the use of optimized interference levels with less clamping force required to seat the gage faces.

Reserve Stroke

The amount of lockrod stroke available from the clamped position, with a cutting unit in place, to the minimum held position in the KM™ clamping unit. Primarily used in the design and evaluation of a KM™ clamping mechanism.

Stand Off

The distance between the gage face of a cutting unit and the gage face of a clamping unit when the tapers first come in contact with one another. Since the taper rate of the KM™ system is 1:10, the measurement is exactly 10 times the amount of interference between the two taper gage diameters.

Stroke

The maximum distance that a lockrod can travel in a KM™ clamping unit. This distance is usually determined by the travel of the lockrod between a front or release stop and a rear or clamping stop.

North America

United States
General Sales: 1 800 446 7738
FtMill.Service@kennametal.com
Technical Support: 1 800 835 3668
na.techsupport@kennametal.com

Canada
General Sales: 800 446 7738
toronto.service@kennametal.com
Technical Support: 1 800 835 3668
na.techsupport@kennametal.com

Mexico
General Sales: 001 888 402 4963
k-mx.service@kennametal.com

Central/South America

Argentina
General Sales: +54 11 4719 0700
buenos-aires.ventas@kennametal.com

Brazil
General Sales: +55 19 3936 9200
bra.marketing@kennametal.com

Chile
General Sales: +56 2 2264 1177
kennametalchile@kennametalchile.cl

Venezuela
Hertec Group
General Sales: +58 212 7510924
ventas@hertecgroup.com

El Salvador
Prometca S.A. DE C.V.
General Sales: +503 2219 7579
portilloprometca@gmail.com

Africa

Egypt
General Sales: +44 1384 408060
na.techsupport@kennametal.com

South Africa
General Sales: +27 11 748 9300
na.techsupport@kennametal.com

Europe

Austria
General Sales: +43 2236 3798980
brunn.sales@kennametal.com
Technical Support: 0800 202873
eu.techsupport@kennametal.com

Belgium
General Sales: 0800 81 372
belgium.sales@kennametal.com
Technical Support: 0800 80850
eu.techsupport@kennametal.com

Czech Republic
Ricany Jazlovice
General Sales: 800 900 840
k-prha.sales@kennametal.com

Denmark
Technical Support: 808 89298
na.techsupport@kennametal.com

Finland
Technical Support: 0800 919412
na.techsupport@kennametal.com

France
General Sales: +33 1 60 12 81 00
info.fr@kennametal.com
Technical Support: 0805 540 367
eu.techsupport@kennametal.com

Germany
General Sales: +49 6003 8277 0
rosbach.sales@kennametal.com
Technical Support: 0800 0006651
eu.techsupport@kennametal.com

Great Britain
General Sales: +44 1384 408060
kingswinford.service@kennametal.com
Technical Support: 0800 032 8339
na.techsupport@kennametal.com

Hungary
General Sales: +36 96 618 150
gyoer.sales@kennametal.com

Ireland
General Sales: +44 1384 408060
na.techsupport@kennametal.com

Italy
General Sales: +39 02 895 961
milano.vendite@kennametal.com
Technical Support: 800 916561
eu.techsupport@kennametal.com

Luxemborg
General Sales: +32 4 248 48 48
liege.sales@kennametal.com

Netherlands
General Sales: 0800 44 33 201
netherlands.sales@kennametal.com
Technical Support: 0800 0201130
eu.techsupport@kennametal.com

Norway
Technical Support: 800 10080
na.techsupport@kennametal.com

Poland
General Sales: +48 61 6656501
poland.service@kennametal.com
Technical Support: 00800 4411887
eu.techsupport@kennametal.com

Portugal
General Sales: +351 22 4119 400
porto.service@kennametal.com

Russia
General Sales: +7 495 4115386
moscow.information@kennametal.com
Technical Support:
Landline: 08800 5556394
Cell Phone: +7 8005556394
eu.techsupport@kennametal.com

Slovakia
General Sales: 0800 044 053
k-eu-zilina.sales@kennametal.com

Spain
General Sales: +34 93 586 03 50
barcelona.service@kennametal.com

Sweden
Technical Support: 020799246
na.techsupport@kennametal.com

Turkey
General Sales: +90 216 574 4780
tr.information@kennametal.com

Ukraine
Technical Support: 0800502664
eu.techsupport@kennametal.com

East/Asia Pacific

Australia
General Sales: 1 800 666 667
k-au.service@kennametal.com
Technical Support: 1 800 67 4037
ap-kmt.techsupport@kennametal.com

Bahrain
General Sales: +971 (0) 5529983
info@passtech.overmach.com

China
General Sales: +86 400 889 2135
Technical Support: 400 889 2238
k-cn.techsupport@kennametal.com

Dubai
General Sales: +971 (0) 5529983
info@passtech.overmach.com

India
General Sales: 1800 103 5138
Technical Support: 1800 103 5227
in.techsupport@kennametal.com

Indonesia
General Sales: +65 6265 9222
k-sg.sales@kennametal.com
Technical Support: 1800 6221031
ap-kmt.techsupport@kennametal.com

Israel
General Sales: +97 23 558 1313
arnold1@inter.net.il
Technical Support: 1809 449889
na.techsupport@kennametal.com

Japan
General Sales: +813 3820 2855
Technical Support: +813 3820 2855
ap-kmt.techsupport@kennametal.com

Korea
General Sales: +82 2 2109 6100
Technical Support: +080 728 0880
ap-kmt.techsupport@kennametal.com

Kuwait
General Sales: +971 (0) 5529983
info@passtech.overmach.com

Malaysia
General Sales: +6 03 5569 9080
Technical Support: 1800812990
ap-kmt.techsupport@kennametal.com

New Zealand
General Sales: 0800 536626
k-nz.service@kennametal.com
Technical Support: 0800 450941
ap-kmt.techsupport@kennametal.com

Oman
General Sales: +971 (0) 6 5529983
info@passtech.overmach.com

Pakistan
General Sales: +92 21 2465305
itsystem@brain.net.pk

Qatar
General Sales: +971 (0) 6 5529983
info@passtech.overmach.com

Saudi Arabia
General Sales: +971 (0) 6 5529983
info@passtech.overmach.com

Singapore*
General Sales: +65 62659222
k-sg.sales@kennametal.com
Technical Support: 1800 6221031
ap-kmt.techsupport@kennametal.com
** Vietnam and Philippines individuals should contact the Singapore office.*

Taiwan
General Sales: +886 4 2350 1920
taiwan.service@kennametal.com
Technical Support: 0800 666 197
ap-kmt.techsupport@kennametal.com

Thailand
General Sales: +662 642 3455
Technical Support: 18004417820
ap-kmt.techsupport@kennametal.com

United Arab Emirates
General Sales: +971 (0) 6 5529983
info@passtech.overmach.com

*Visit **kennametal.com** for additional contact information for locations.*



10. Information Request Form

KM4X — Information Request

Requestor:

_____

_____

❑ Quote ❑ Request for Technical Information ❑ Request for Technical Support

Machine Type: _____

Current Interfaces: _____

Interface Size: ❑ KM4X63 ❑ KM4X100 ❑ KM4X125

Operation: ❑ Milling ❑ Turning ❑ Multi Task

Spindle Length: _____ mm

Spindle Diameter: _____ mm

Maximum RPM: _____ RPM

Coolant Pressure: _____ bar ❑ No Coolant

Cleaning Air: _____ bar ❑ No Cleaning Air

Tool Release Force: _____ kN

Machine Side Stroke Limitation Available:

Front Stop: ❑ Yes ❑ No

Rear Stop: ❑ Yes ❑ No

Please send the form to your local customer sales representative.

Metalcutting Safety

IMPORTANT SAFETY INSTRUCTIONS

Read before using the tools in this catalog!

Projectile and Fragmentation Hazards:

Modern metalcutting operations involve high spindle and cutter speeds and high temperatures and cutting forces. Hot metal chips may fly off the workpiece during metalcutting. Although cutting tools are designed and manufactured to withstand high cutting forces and temperatures, they can sometimes fragment, particularly if they are subjected to over-stress, severe impact, or other abuse.

To avoid injury:

- Always wear appropriate personal protective equipment, including safety goggles, when operating metalcutting machines or working nearby.
- Always make sure all machine guards are in place.

Breathing and Skin Contact Hazards:

Grinding carbide or other advanced cutting tool materials produces dust or mist containing metallic particles. Breathing this dust or mist — especially over an extended period — can cause temporary or permanent lung disease or make existing medical conditions worse. Contact with this dust or mist can irritate eyes, skin, and mucous membranes and may make existing skin conditions worse.

To avoid injury:

- Always wear breathing protection and safety goggles when grinding.
- Provide ventilation control and collect and properly dispose of dust, mist, or sludge from grinding.
- Avoid skin contact with dust or mist.

For more information, read the applicable Material Safety Data Sheet provided by Kennametal and consult General Industry Safety and Health Regulations, Part 1910, Title 29 of the Code of Federal Regulations.

These safety instructions are general guidelines. Many variables affect machining operations. It is impossible to cover every specific situation. The technical information included in this catalog and recommendations on machining practices may not apply to your particular operation. For more information, consult the Kennametal Metalcutting Safety booklet, available free from Kennametal at 724 539 5747 or fax 724 539 5439. For specific product safety and environmental questions, contact our Corporate Environmental Health and Safety Office at 724 539 5066 or fax 724 539 5372.

Kennametal, the stylized K, Beyond Evolution, Drill Fix, Hydroforce, Kenclamp, KM, KMTS, KM4X, KM4X63, KM4X100, KM4X125, KM4X-LOC II, KM-TS, NOVO, Top Cut Plus, and Top Notch are trademarks of Kennametal, Inc. and are used as such herein. The absence of a product, service name, or logo from this list does not constitute a waiver of the Kennametal trademark or other intellectual property rights concerning that name or logo.

Kelch® is a registered trademark of the Bemis Manufacturing Company.
OTT® is a registered trademark of Ott-Jakob Spanntechnik GmbH.
Rengage® and Renishaw® are registered trademarks of Renishaw, plc.
Safe-Lock™ is a trademark of Haimer GmbH.
Sandvik® is a registered trademark of Sandvik Coromant ABD.
Zoller® is a registered trademark of E. Zoller GmbH & Co. KG.

©Copyright 2017 by Kennametal Inc., Latrobe, PA 15650. All rights reserved.

INNOVATIONS CATALOG

WORLD HEADQUARTERS
Kennametal Inc.
1600 Technology Way
Latrobe, PA 15650 USA
Tel: 1 800 446 7738
ftmill.service@kennametal.com

EUROPEAN HEADQUARTERS
Kennametal Europe GmbH
Rheingoldstrasse 50
CH 8212 Neuhausen am Rheinfall
Switzerland
Tel: +41 52 6750 100
neuhausen.info@kennametal.com

ASIA-PACIFIC HEADQUARTERS
Kennametal Singapore Pte. Ltd.
3A International Business Park
Unit #01-02/03/05, ICON@IBP
Singapore 609935
Tel: +65 6265 9222
k-sg.sales@kennametal.com

INDIA HEADQUARTERS
Kennametal India Limited
CIN: L27109KA1964PLC001546
8/9th Mile, Tumkur Road
Bangalore - 560 073
Tel: +91 080 22198444 or +91 080 43281444
bangalore.information@kennametal.com

KENNAMETAL®

kennametal.com

©2017 Kennametal Inc. I All rights reserved. I A-16-05089EN